BEE701 Switchgear and Protection

Dept. of EEE, ATMECE, Mysuru

Module 1: Introduction to Power System Protection, Relay Construction and Operating Principles:, Overcurrent Protection	Need for protective schemes, Nature and Cause of Faults, Types of Fault, Effects of Faults, Fault Statistics, Zones of Protection, Primary and Backup Protection, Essential Qualities of Protection, Performance of Protective Relaying, Classification of Protective Relays, Automatic Reclosing, Current Transformers for protection, Voltage Transformers for Protection, Electromechanical Relays, Static Relays – Merits and Demerits of Static Relays, Numerical Relays, Comparison between Electromechanical Relays and Numerical Relays.

Learning Resources prescribed by University:

Textbook				
Power System Protection and Switchgear	Badri Ram, D.N. Vishwakarma	McGraw Hill	2nd Edition	
Power System Protection and Switchgear	Bhuvanesh Oza et al	McGraw Hill	1st Edition, 2010	
Reference Books				
Protection and Switchgear	Bhavesh et al	Oxford	1st Edition, 2011	
Power System Switchgear and Protection	N. Veerappan S.R. Krishnamurthy	S. Chand	1st Edition, 2009	
Fundamentals of Power System Protection	Y.G.Paithankar S.R. Bhide	PHI	1st Edition, 2009	

Overview of Electrical Energy Systems

Electrical Energy is

- Generated at few kV and stepped up.
- Transmitted through AC and HVDC lines.
- Stepped down and distributed at load centers.
- Its natural mode of synchronous operation knits the system together

Electrical energy systems consists of various equipments connected together. Typically, power is generated at lower voltages (a few kV) (3-phase ac voltage source) which is stepped up by a transformer and fed into a transmission grid. Thermal power should be generated at pit heads and hydro power at reservoirs. A transmission grid is a meshed network of high voltage lines and transformers. It can have multiple voltage levels like 800kV, 400 kV, 220 kV, etc. The power is delivered to load centers which may be far off (even thousands of km's apart).

A unique feature of electrical energy systems is its natural mode of synchronous operation. It implies that during steady state the electrical frequency is same all through the system irrespective of the geographical location. This closely knits the system together.

Overview of Electrical Energy Systems

We can perceive all generators acting in tandem like the ballet dancers in a dance, They may occupy different angular positions, but all machines rotate at the same electrical speed. This close knitting implies an embedded interaction of generators through the transmission network which is governed by the differential and algebraic equations of the apparatus and interconnects. This aspect is referred to as the system behavior. This system has to be protected from abnormalities which is the task of protection system.

Why do we need Protection?

Electrical apparatus operates at various voltage levels and may be enclosed or placed in open. Under abnormal operating conditions protection is necessary for

- Safety of electrical equipments.
- Safety of human personnel.

Power System Protection – Main Functions
1. To safeguard the entire system to maintain continuity of supply. 2. To minimize damage and repair costs. 3. To ensure safety of personnel.

Electrical power system operates at various voltage levels from 415 V to 800 kV or even more. Electrical apparatus used may be enclosed (e.g., motors) or placed in open (e.g., transmission lines). All such equipment undergo abnormalities in their life time due to various reasons. For example, a worn out bearing may cause overloading of a motor. A tree falling or touching an overhead line may cause a fault. A lightning strike (classified as an act of God!) can cause insulation failure. Pollution may result in degradation in performance of insulators which may lead to breakdown. Under frequency or over frequency of a generator may result in mechanical damage to it's turbine requiring tripping of an alternator. Even otherwise, low frequency operation will reduce the life of a turbine and hence it should be avoided.

Why do we need Protection?

It is necessary to avoid these abnormal operating regions for safety of the equipment. Even more important is safety of the human personnel which may be endangered due to exposure to live parts under fault or abnormal operating conditions. Small current of the order of 50 mA is sufficient to be fatal! Whenever human security is sacrificed or there exists possibility of equipment damage, it is necessary to isolate and de-energize the equipment. Designing electrical equipment from safety perspective is also a crucial design issue which will not be addressed here. To conclude, every electrical equipment has to be monitored to protect it and provide human safety under abnormal operating conditions. This job is assigned to electrical protection systems. It encompasses apparatus protection and system protection.

Types of Protection

Protection systems can be classified into apparatus protection and system protection.

Apparatus Protection

Apparatus protection deals with detection of a fault in the apparatus and consequent protection.

Apparatus protection can be further classified into following:

- Transmission Line Protection and feeder protection
- Transformer Protection
- Generator Protection
- Motor Protection
- Busbar Protection

System Protection

- System Protection Out-of-Step Protection
- Under-frequency Relays
- Islanding Systems
- Rate of Change of Frequency Relays

System protection deals with detection of proximity of system to unstable operating region and consequent control actions to restore stable operating point and/or prevent damage to equipments. Loss of system stability can lead to partial or complete system blackouts. Under-frequency relays, out-of-step protection, islanding systems, rate of change of frequency relays, reverse power flow relays, voltage surge relays etc are used for system protection. Wide Area Measurement (WAM) systems are also being deployed for system protection. Control actions associated with system protection may be classified into preventive or emergency control actions

Analogy with Functioning of a Human being

A human being is a complex system that performs through various apparatus like legs, hands, eyes, ears, heart, bones, blood vessels etc. The heart is analogous to an electrical generator and stomach to the boiler. The eating process provides raw material to generate calories. The power generated is pumped by heart through a complex network of blood vessels. The primary transmission is through arteries and veins. Furthermore, distribution is through fine capillaries. The system operator is the brain which works on inputs of eyes, ears, skin etc. Diagnosing abnormality in any of these organs and taking remedial measures can be thought of as job of "apparatus protection". However, does this cover the complete gambit of anomalies? Are fever, infection etc, a specific apparatus problem? Why does it cause overall deterioration in functioning of the human being?

The answer lies in the fact that the system which encompasses body has also abstraction like the mind. Overall health is not just an aggregation of apparatus. It is something much more complex. It involves complex process and associated dynamics (biological, chemical, mechanical etc.) and control. Thus, protecting a system is not just apparatus protection but something much more. Since we cannot define this "much more" clearly, it is complex and challenging. Monitoring of system behavior, taking corrective measures to maintain synchronous operation and protecting the power system apparatus from harmful operating states is referred as system protection.

What Components (Equipment) Do We Protect?

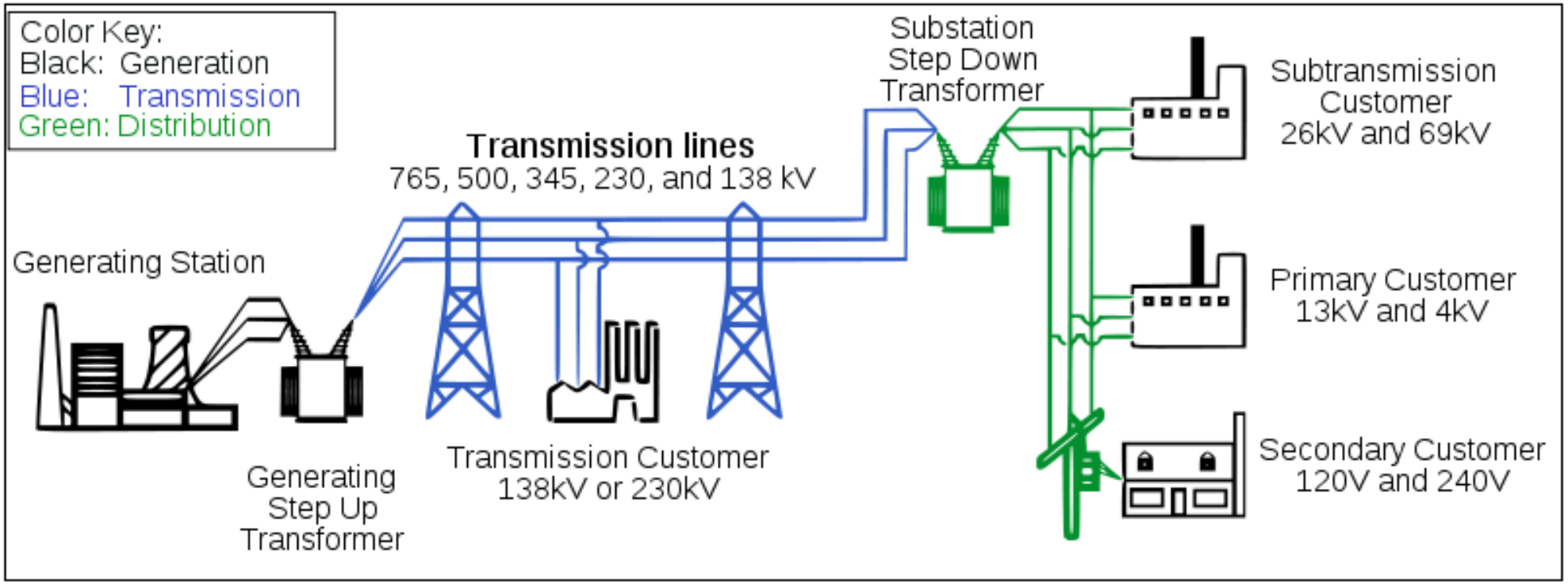

Protective relays monitor the current and/or voltage of the power system to detect problems with the power system.

Currents and voltages to relays are supplied via CT's and PT's.

Power System Protection – Basic Components

1. *Voltage transformers and current transformers*: To monitor and give accurate feedback about the healthiness of a system.
2. *Relays*: To convert the signals from the monitoring devices, and give instructions to open a circuit under faulty conditions or to give alarms when the equipment being protected, is approaching towards possible destruction.
3. *Fuses*: Self-destructing to save the downstream equipment being protected.
4. *Circuit breakers*: These are used to make circuits carrying enormous currents, and also to break the circuit carrying the fault currents for a few cycles based on feedback from the relays.
5. *DC batteries*: These give uninterrupted power source to the relays and breakers that is independent of the main power source being protected.

What is a Relay

A relay is a logical element which processes the inputs (mostly voltages and currents) from the system/apparatus and issues a trip decision if a fault within the relay's jurisdiction is detected. Inputs to a relay are

- Current from a current transformer.
- Voltage from a voltage transformer.

A conceptual diagram of relay is shown in fig 1.2.

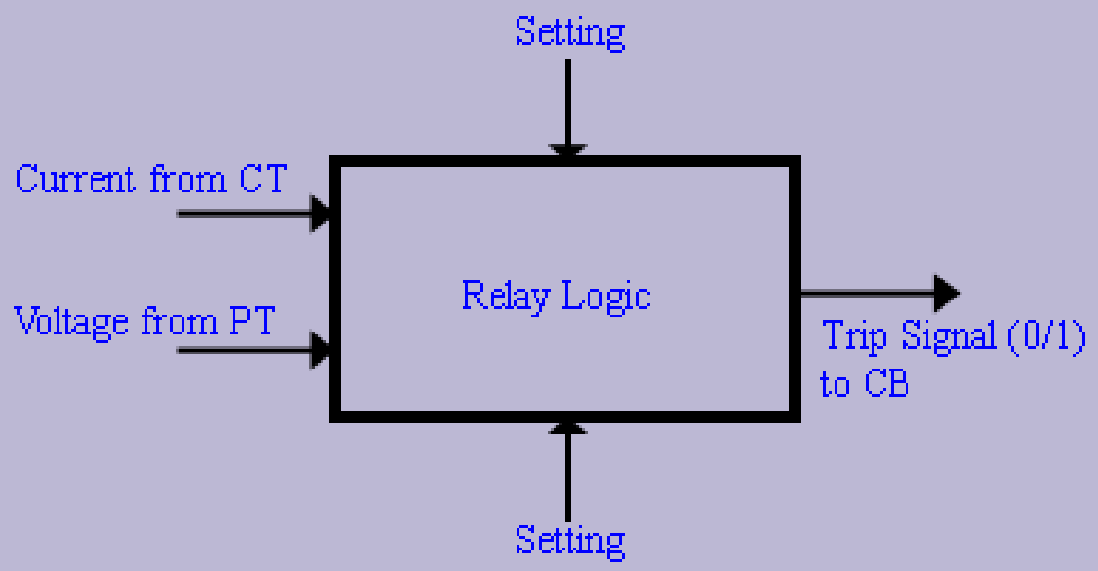

Fig 1.2 Conceptual Diagram of Relay

The relay element analyzes these inputs and decides whether (a) there is a abnormality or a fault and (b) if yes, whether it is within jurisdiction of the relay.

To monitor the health of the apparatus, relay senses current through a current transformer (CT), voltage through a voltage transformer (VT).

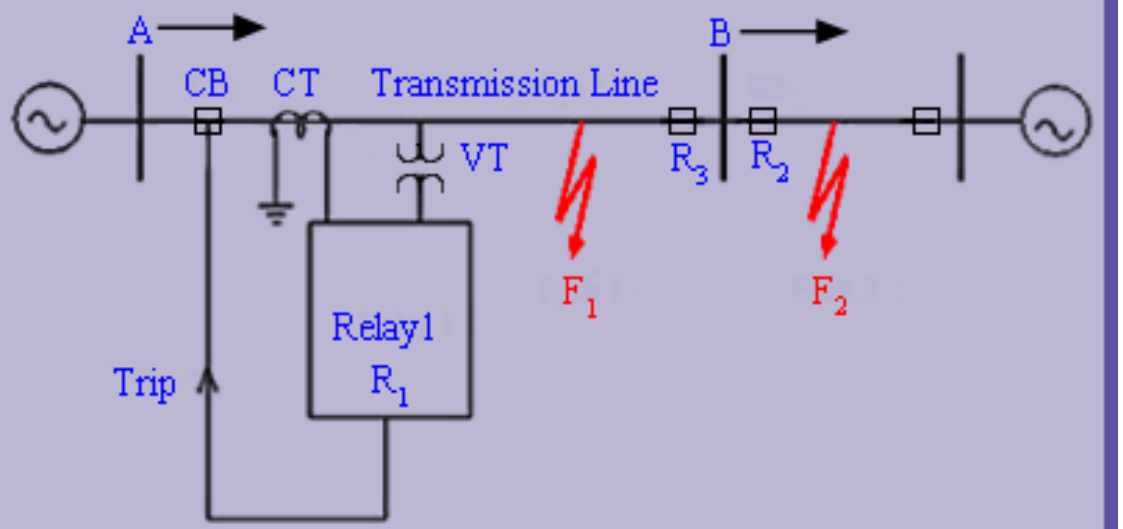

Fig 1.3 Typical Relaying System

The relay element analyzes these inputs and decides whether (a) there is a abnormality or a fault and (b) if yes, whether it is within jurisdiction of the relay.

The jurisdiction of relay R_1 is restricted to bus B where the transmission line terminates. If the fault is in it's jurisdiction, relay sends a tripping signal to circuit breaker(CB) which opens the circuit. A real life analogy of the jurisdiction of the relay can be thought by considering transmission lines as highways on which traffic (current/power) flows.

If there is an obstruction to the regular flow due to fault F_1 or F_2, the traffic police (relay R_1) can sense both F_1 and F_2 obstructions because of resulting abnormality in traffic (power flow). If the obstruction is on road AB, it is in the jurisdiction of traffic police at R1; else if it is at F_2, it is in the jurisdiction of R_2. **R_1 should act for fault F_2, if and only if, R_2 fails to act**. We say that relay R_1 backs up relay R_2. Standard way to obtain backup action is to use time discrimination i.e., delay operation of relay R_1 in case of doubt to provide R_2 first chance to clear the fault.

ATME College of Engineering

Department of EEE
Emitting Elite Energy

Causes of Faults

Equipment	Cause of fault	% of Total Faults
1. Overhead lines	Lightning strokes Storms, earthquakes, icing Birds, trees, kites aeroplanes, snakes, etc. Internal over-voltages.	30—40
2. Underground cables	Damage during digging Insulation failure due to temperature rise Failure of joints	8—10
3, Alternators (Generator)	Stator faults Rotor faults Abnormal conditions Faults in associated equipment Faults in protective system	6—8
4. Transformers	Insulation failure Faults in tap-changer Faults in bushing Faults in protection circuit Inadequate protection Overloading, over voltage.	10—12
5. CT, PT	Over-voltages Insulation failures Breaking of conductors Wrong connections	15-20
6 Switchgear	Insulation failure Mechanical defect Leakage of air/oil/gas Inadequate rating Lack of maintenance.	10-12

EFFECTS OF FAULTS

The most dangerous type of fault is a short circuit as it may have the following effects on a power system, if it remains uncleared.

- Heavy short circuit current may cause damage to equipment or any other element of the system due to overheating and high mechanical forces set up due to heavy current.
- Arcs associated with short circuits may cause fire hazards. Such fires, resulting from arcing, may destroy the faulty element of the system. There is also a possibility of the fire spreading to other parts of the system if the fault is not isolated quickly.
- There may be reduction in the supply voltage of the healthy feeders, resulting in the loss of industrial loads.
- Short circuits may cause the unbalancing of supply voltages and currents, thereby heating rotating machines.

EFFECTS OF FAULTS

- There may be a loss of system stability. Individual generators in a power station may lose synchronism, resulting in a complete shutdown of the system. Loss of stability of interconnected systems may also result. Subsystems may maintain supply for their individual zones but load shedding would have to be resorted in the sub-system which was receiving power from the other subsystem before the occurrence of the fault.
- The above faults may cause an interruption of supply to consumers, thereby causing a loss of revenue.
- High grade, high speed, reliable protective devices are the essential requirements of a power system to minimise the effects of faults and other abnormalities

Abnormality and Faults

When an equipment (e.g. transmission line, transformer, generator, motor) is operating within the rated specifications (speed, voltage, current etc.), we say that it is in the normal state. Therefore, abnormal state pertains to deviation from the rated operating point. It may refer to overcurrent, under voltage, over or under frequency. If the apparatus continues to operate in this state for long enough time, it can lead to damage or reduction in life of the equipment. On the other hand, it may be also unsafe to operate in this region. A fault refers to a serious abnormality which typically requires immediate deenergization of the equipment.

Usually, **faults** are considered dangerous because of overcurrent that they create. This can damage the apparatus and it endangers the human safety. Three phase faults, Line to Line faults (LL), Single Line to Ground fault (SLG), Line to Line Ground faults (LLG) are some standard faults considered in our analysis. Three phase faults and Line to Line faults are also known as phase faults while Single Line to Ground and Double Line to Ground faults are also known as ground faults. However, not all faults create large overcurrents. For example, earth faults which may result due to partial insulation failure may not create large currents. However, it makes operation of the equipment unsafe from human safety perspective and further, if the fault is left unattended it can aggravate

Fault types and their effects

Active fault

The 'active' fault is when actual current flows from one phase conductor to another (phase-to-phase), or alternatively from one phase conductor to earth (phase-to-earth). This type of fault can also be further classified into two areas, namely the

1. **'Solid' fault**
2. **'Incipient' fault.**

The **solid fault** occurs as a result of an immediate complete breakdown of insulation as would happen if, say, a pick struck an underground cable, bridging conductors, etc. or the cable was dug up by a bulldozer. In mining, a rockfall could crush a cable. In these circumstances the fault current would be very high resulting in an electrical explosion

Incipient fault

The 'incipient' fault, on the other hand, is a fault that starts as a small thing and gets developed into catastrophic failure. Like for example some partial discharge (excessive discharge activity often referred to as Corona) in a void in the insulation over an extended period can burn away adjacent insulation, eventually spreading further and developing into a 'solid' fault. Other causes can typically be a high-resistance joint or contact, alternatively pollution of insulators causing tracking across their surface. Once tracking occurs, any surrounding air will ionize which then behaves like a solid conductor consequently creating a 'solid' fault.

Passive faults

Passive faults are not real faults in the true sense of the word, but are rather conditions that are stressing the system beyond its design capacity, so that ultimately active faults will occur.

Typical examples are:

- **Overloading** leading to over heating of insulation (deteriorating quality, reduced life and ultimate failure).
- **Overvoltage**: Stressing the insulation beyond its withstand capacities.
- **Under frequency:** Causing plant to behave incorrectly.
- **Power swings:** Generators going out-of-step or out-of-synchronism with each other.

It is therefore very necessary to monitor these conditions to protect the system against these conditions.

Transient and permanent faults

Transient faults are faults, which do not damage the insulation permanently and allow the circuit to be safely re-energized after a short period.

A typical example would be an insulator flashover following a lightning strike, which would be successfully cleared on opening of the circuit breaker, which could then be automatically closed. Transient faults occur mainly on outdoor equipment where air is the main insulating medium.

Permanent faults, as the name implies, are the result of permanent damage to the insulation. In this case, the equipment has to be repaired and recharging must not be entertained before repair/restoration.

Types of faults on a Three-Phase System

Largely, the power distribution is globally a three-phase distribution especially from power sources. The types of faults that can occur on a three-phase AC system are shown in Figure

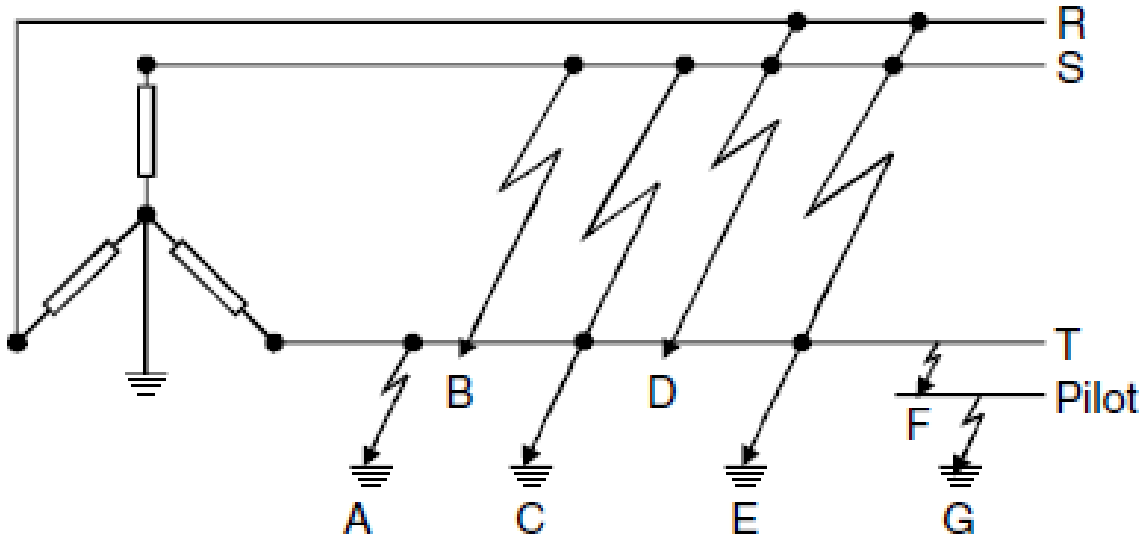

Types of faults on a three-phase system: (A) Phase-to-earth fault; (B) Phase-to-phase fault; (C) Phase-to-phase-to-earth fault; (D) Three-phase fault; (E) Three-phase-to-earth fault; (F) Phase-to-pilot fault; (G) Pilot-to-earth fault**

**In underground mining applications only*

Symmetrical and Asymmetrical faults

Symmetrical fault is a balanced fault with the sinusoidal waves being equal about their axes, and represents a steady-state condition.

An asymmetrical fault displays a DC offset, transient in nature and decaying to the steady state of the symmetrical fault after a period of time, as shown in Figure

	Types of fault	% of occurrence
Asymmetrical faults	Single Line to ground faults	70%
	Double line faults	15%
	Double line to ground faults	10%
symmetrical faults	Triple line faults (Balanced three phase faults)	5%

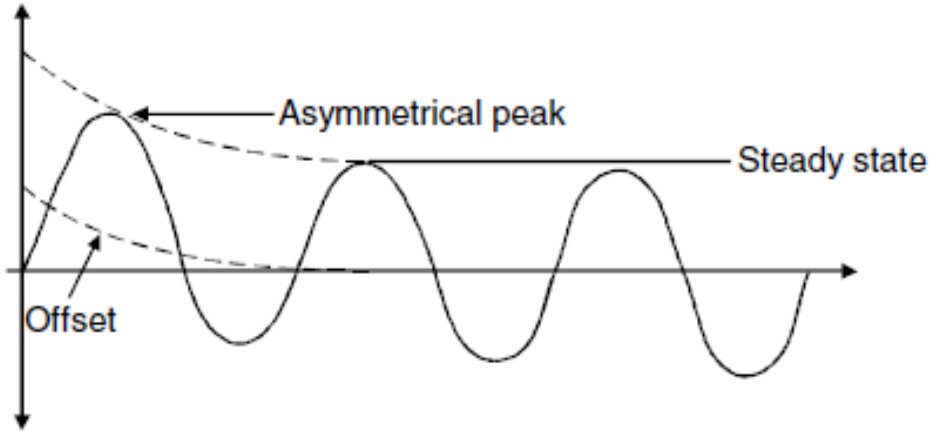

An asymmetrical fault

Symmetrical and Asymmetrical faults

Symmetrical faults: Fault current is same in all the Three Phases and hence system remains balanced even after fault occurrence, Three Phase Short Circuit is generally treated as a standard fault to determine the system fault level

Symmetrical fault conditions are analyzed on a single phase basis using thevenin's theorem or using bus matrix impedance matrix. these faults are relatively rare, but are the easiest to analyze so we'll consider them first

Unsymmetrical faults: Fault current is not same in all the Three Phases , System is no longer balanced; these faults are very common, but more difficult to analyze. Analyzed using symmetrical components

Faults Analysis

Fault currents cause equipment damage due to both thermal and mechanical processes.

The main goal of fault analysis is to determine the magnitudes of the currents present during the fault:

For proper choice of circuit breakers and protective relaying, we must estimate the magnitude of currents that would flow under short circuit conditions-this is the scope of fault analysis (study)

The Reason to analyze faults are:

- We need to determine the maximum current to ensure devices can survive the fault.
- We need to determine the maximum current the circuit breakers (CBs) need to interrupt to correctly size the CBs.
- To set the relays so that can detect it.
- To make sure that the circuit breakers ratings are such that they are capable of interrupting the fault current

In a power system, the most severe fault is three phase fault and less severe fault is open conductor fault.

The various faults in the order of decreasing severity are,

1) Three phase fault
2) Double line-to-ground fault
3) Line-to-line fault
4) Single line-to-ground fault
5) Open conductor fault

Fault calculations

The fault condition of a power system can be divided into subtransient, transient, and steady state periods. The currents in the various parts of the system and in the fault locations are different in these periods. The estimation of these currents for various types of faults at various locations in the system is commonly referred to as fault calculations

ZONES OF PROTECTION

- To limit the extent of the power system that is disconnected when a fault occurs, protection is arranged in zones
- A relay's zone of protection is a region defined by relay's jurisdiction
- It is shown by demarcating the boundary.
- This demarcation for differential protection is quite crisp and is defined by CT's location.
- On the other hand, such boundaries for overcurrent and distance relays are not very crisp.
- It is essential that primary zones of protection should always overlap to ascertain that no position of the system ever remains unprotected.
- It can be seen in fig 4.3. This overlap also accounts for faults in the circuit breakers.
- To provide this overlap additional CTs are required.

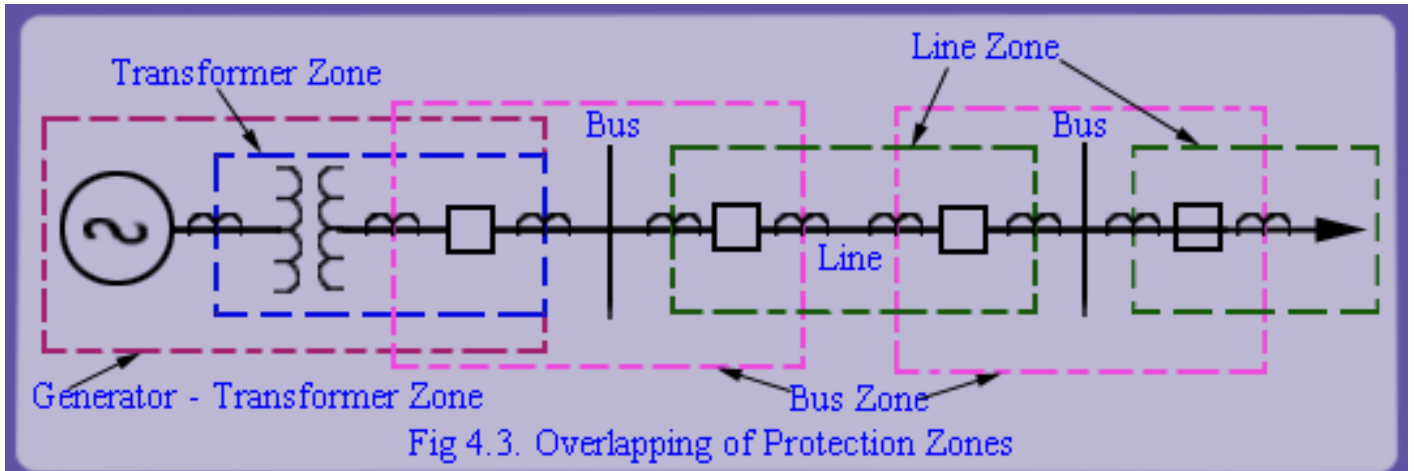

Fig 4.3. Overlapping of Protection Zones

The Power system is divided into protective zones

- Generators zone
- Transformers zone
- Buses and distribution feeders zone
- Transmission lines zone
- Motors zone

- it is common for zones of protection to overlap so that multiple layers of protection are afforded to each piece of equipment. This points to the idea of primary and secondary (backup) protection
- Overlapping and backup protection is implemented to avoid the possibility of unprotected areas, especially for critical equipment. This is accomplished by the strategic placement of the instrument transformers (current transformers or potential transformers) **Neighboring zones overlap so that no 'dead spot' are left in the protected system**

ZONES OF PROTECTION

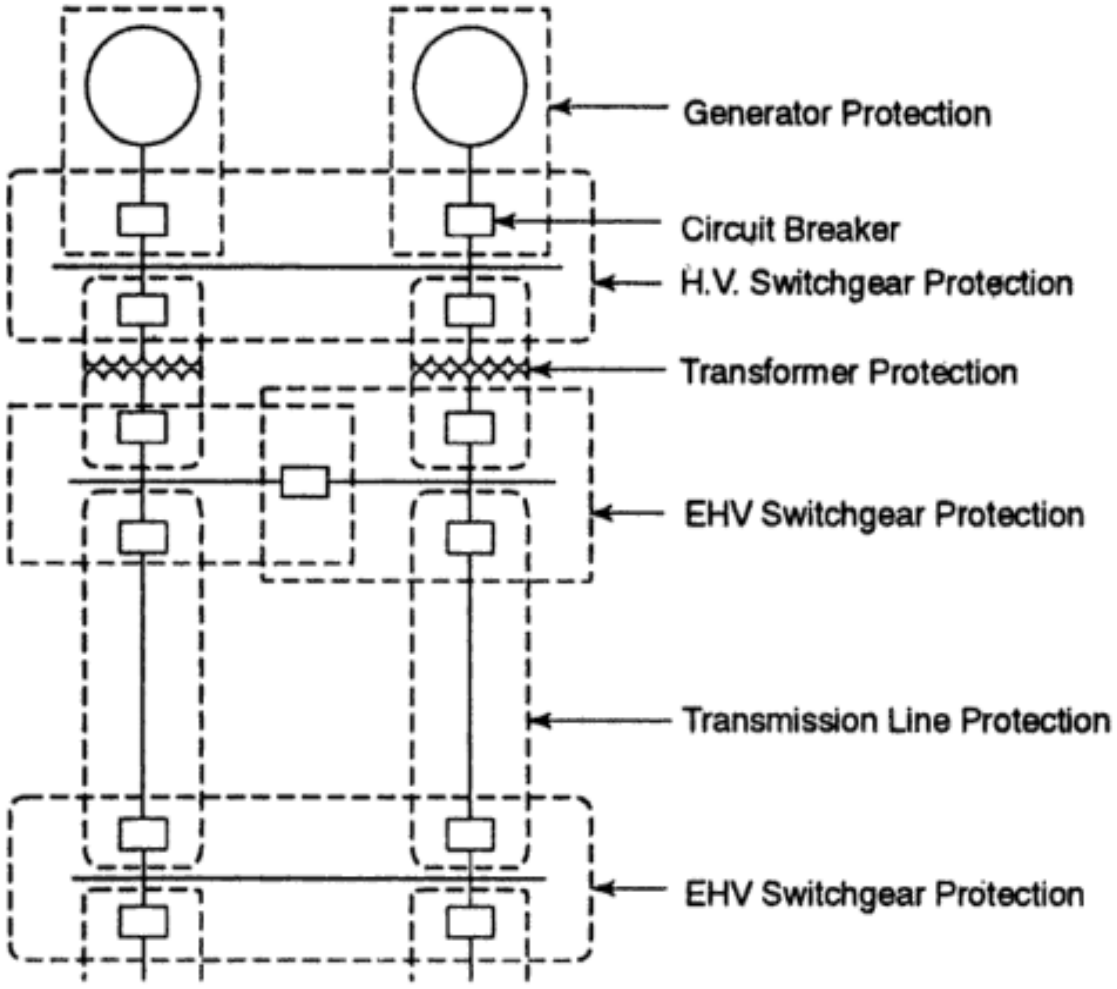

FIGURE 1.1 Zones of protection

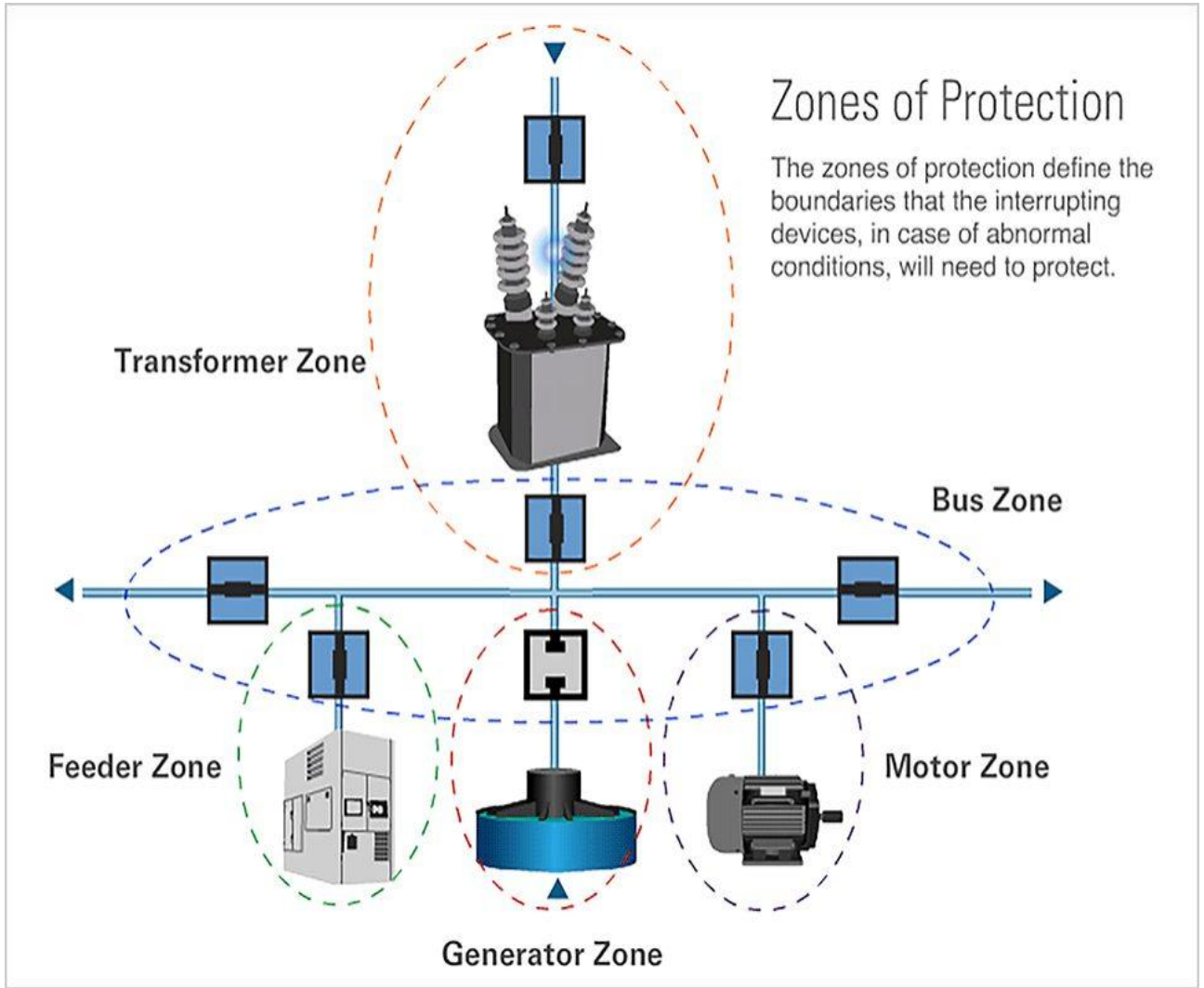

Neighboring zones overlap so that no 'dead spot' are left in the protected system

PRIMARY AND BACK-UP PROTECTION

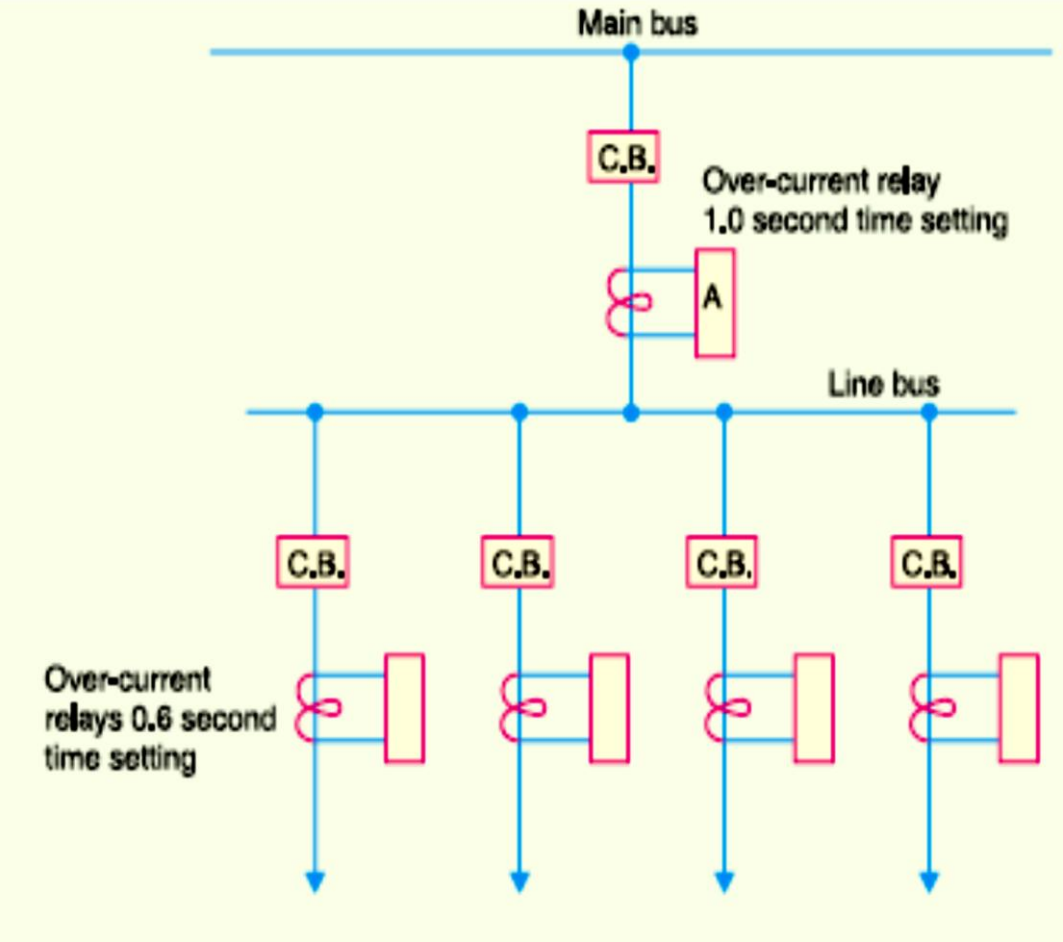

There are two groups of relaying equipments for protecting any equipment:

1. Primary relaying equipment.
2. Secondary or Back-up relaying equipment.

Primary relaying is the first line of defence for protecting the equipments as quick as possible.

Whereas the backup protection relaying works only when the primary relaying equipment fails, which means back-up relaying is inherently slow in action.

Primary relaying may fail because of failure of any of the following:

(i) Protective relays (moving mechanism etc.).
(ii) Circuit breaker.
(iii) D.C. tripping voltage supply.
(iv) Current or voltage supply to the relays.

Since it is required that back-up relays should operate in case primary relays fail, the back-up relays should not have anything common with primary relays. A second job of the back up relay is to act as primary protection in case the primary protection equipment is taken out to repair and maintenance

PRIMARY AND BACK-UP PROTECTION

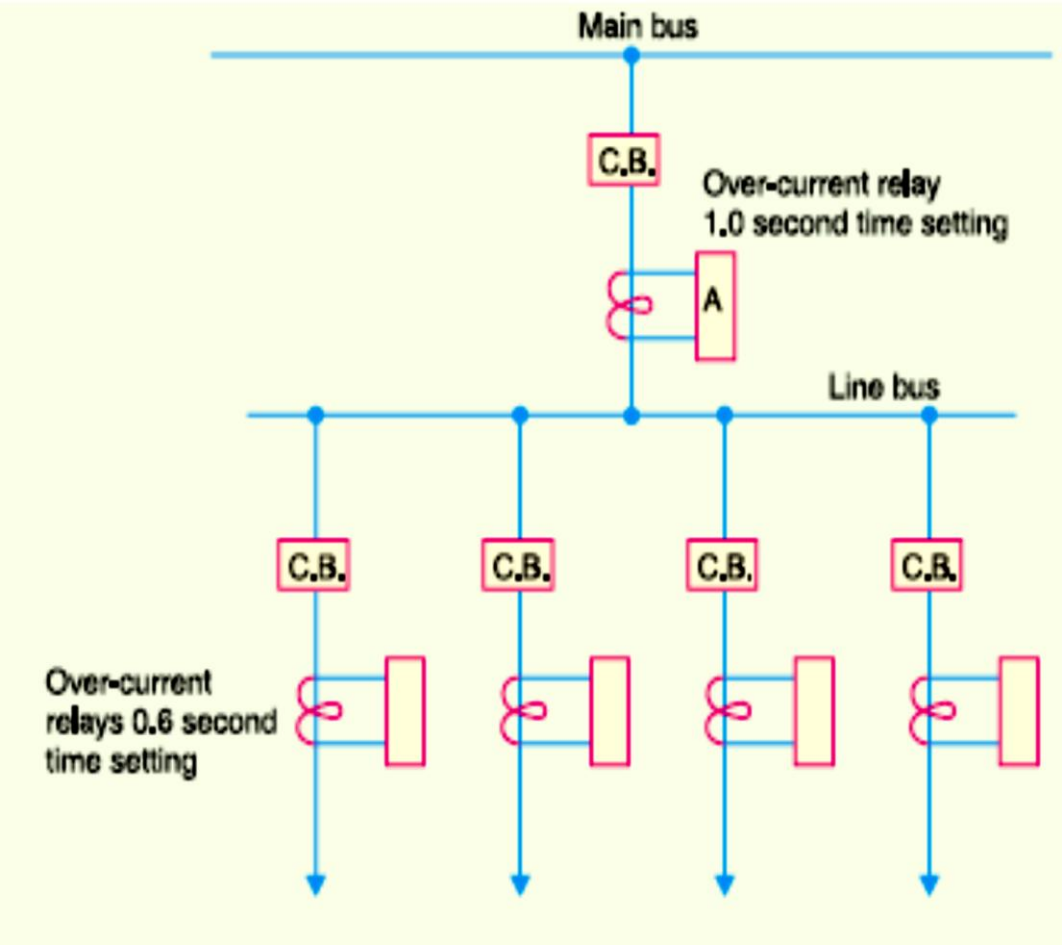

The methods of Back-Up protection can be classified as follows:

Relay Back-up.
Same breaker is used by both main and back-up protection, but the protective systems are different. Separate trip coils may be provided for the same-breaker.

Breaker Back-up
Breaker Back-up. Different breakers are provided for main and back-up protection, both the breakers being in the same station

Remote back-up.
Remote back-up. The main and Back-up protections provided at different stations and are completely independent.

PRIMARY AND BACK-UP PROTECTION

Table 1.3 Percentage failure rate of various equipment

Name of Equipment	*% of Total Failures*
Relays	44
Circuit breaker interrupters	14
AC wiring	12
Breaker trip mechanisms	8
Current transformers	7
DC wiring	5
VT	3
Breaker auxiliary switches	3
Breaker tripcoils	3
DC supply	1

The methods of Back-Up protection can be classified as follows:

Relay Back-up.
Same breaker is used by both main and back-up protection, but the protective systems are different. Separate trip coils may be provided for the same-breaker.

Breaker Back-up
Breaker Back-up. Different breakers are provided for main and back-up protection, both the breakers being in the same station

Remote back-up.
Remote back-up. The main and Back-up protections provided at different stations and are completely independent.

ESSENTIAL / DESIRABLE QUALITIES OF PROTECTIVE RELAYING

Protective relaying should have certain qualities. Some of these quantities cannot be expressed in form of a mathematical expression, however, they are important. The qualities of protective relaying are named as

- Selectivity & discrimination.
- Fast Operation.
- Sensitivity.
- Stability.
- Reliability.
- Economy/Adequateness.

Power System Protection – Basic Requirements
1. *Selectivity*: To detect and isolate the faulty item only. 2. *Stability*: To leave all healthy circuits intact to ensure continuity of supply. 3. *Speed*: To operate as fast as possible when called upon, to minimize damage, production downtime and ensure safety to personnel. 4. *Sensitivity*: To detect even the smallest fault, current or system abnormalities and operate correctly at its setting.

Selectivity & discrimination.

- **This is the property by which only the faulty element of the system is isolate and remaining healthy section should are left intact.**
- **A relay should be able to discriminate weather the fault is in its jurisdiction or not.**
- **This jurisdiction of a relay is also called as zone of protection,**
- **This jurisdiction of a relay is also called as zone of protection zone are classified into primary and backup zones**

Selectivity is usually provided by

1. **Time discrimination : Over current relay and differential protection use this principle**
2. **Applying differential protection principle : in case of differential protection, the CT Location provide crisp demarcation of zone of protection**

Discrimination is 'the act Discriminating' or 'distinguishing the difference between' the following: Normal Condition & Abnormal condition

The protective system should operate only during abnormal conditions and should not operate under normal condition. In other words, the protective relaying system should discriminate between normal condition and abnormal condition. It should select and disconnect only faulty part without disconnecting the remaining healthy part.

For example, transformer when energized can draw up to 20 times rated current (inrush current) which can confuse, both overcurrent and transformer differential protection. Typically, inrush currents are characterized by large second harmonic content. This discriminant is used to inhibit relay operation during inrush, there by, improving selectivity in transformer protection

Selectivity (contd..)

Also, a relay should be smart enough, not just to identify a fault but also be able to decide whether fault is in it's jurisdiction or not. For example, a relay for a feeder should be able to discriminate a fault on it's own feeder from faults on adjacent feeders. This implies that it should detect first existence of fault in it's vicinity in the system and then take a decision whether it is in it's jurisdiction. Recall that directional overcurrent relay was introduced to improve selectivity of overcurrent relay.

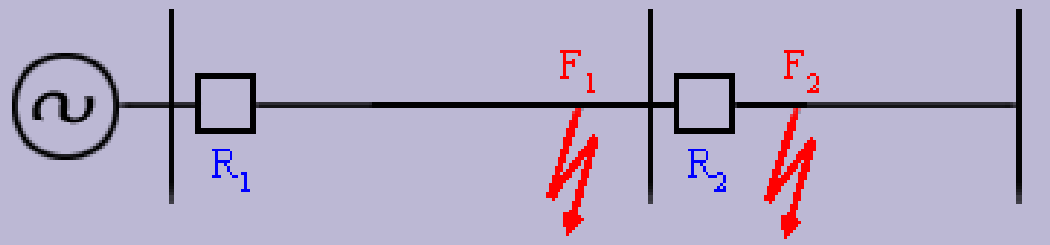

Relay R_1 cannot discriminate between F_1 and F_2 accurately as $I_{F1} \approx I_{F2}$
Time discrimination between R_1 and R_2 provides a solution.

Fig 4.1 Distance or Overcurrent Protection

This jurisdiction of a relay is also called as zone of protection. Typically, protection zones are classified into primary and backup zones. In detecting a fault and isolating the faulty element, the protective system must be very selective. Ideally, the protective system should zero-in on the faulty element and only isolate it, thus causing a minimum disruption to the system. Selectivity is usually provided by (1) using time discrimination and (2) applying differential protection principle. With overcurrent and distance relays, such boundaries are not properly demarcated (see fig 4.1). This is a very important consideration in operation of power systems.

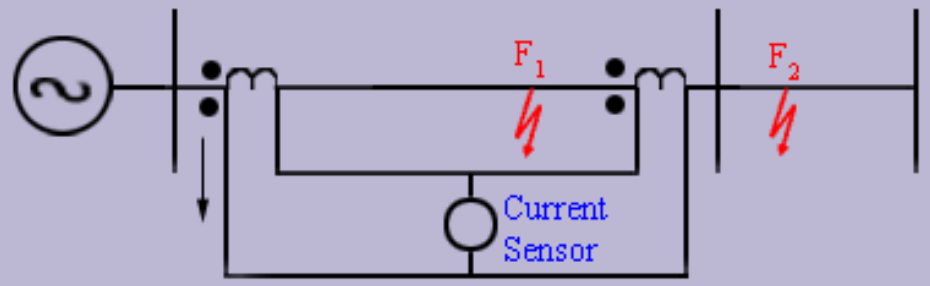

Fig 4.2 Differential Protection Scheme

Speed/Fast Operation

- A protective system should be fast enough to isolate the faulty element of the system as quickly as possible to improve quality of service, increase safety of life and property, increase stability of operation and to minimize damage to the equipment and minimize system instability
- This implies that relay should quickly arrive at a decision and circuit breaker operation should be fast enough
- Fault clearing time is the time between the instant of fault and instant of final arc interruption (in circuit breaker).
- Fault clearing time is the sum of relay-time and circuit breaker-time

Power System Protection – Speed is Vital!!
The protective system should act fast to isolate faulty sections to prevent: • Increased damage at fault location. Fault energy = $I^2 \times R_f \times t$, where t is time in seconds. • Danger to the operating personnel (flashes due to high fault energy sustaining for a long time). • Danger of igniting combustible gas in hazardous areas, such as methane in coal mines which could cause horrendous disaster. • Increased probability of earth faults spreading to healthy phases. • Higher mechanical and thermal stressing of all items of plant carrying the fault current, particularly transformers whose windings suffer progressive and cumulative deterioration because of the enormous electromechanical forces caused by multi-phase faults proportional to the square of the fault current. Sustained voltage dips resulting in motor (and generator) instability leading to extensive shutdown at the plant concerned and possibly other nearby plants connected to the system.

Sensitivity

- Its is the ability of the relay to pick up even on smallest possible fault
- A protective relay should operate when the magnitude of the current exceeds the preset (Pick-up) value. This value is called the pick-up current. The relay should not operate when the current is below its pick-up value. A relay should be sufficiently sensitive to operate when the operating current just exceeds its pick-up value

Stability

This is the ability of the protective system to remain inoperative under all load conditions, and also in case of external faults. The relay should remain stable when a heavy current due to an external fault is flowing through it .

OR

- **A protective system should remain stable even when a large current is flowing through its protective zone due to an external fault, which does not lie in its zone. The concerned circuit breaker is supposed to clear the fault. But the protective system will not wait indefinitely if the protective e scheme of the zone in which fault has occurred fails to operate. After a preset delay the relay will operate to trip the circuit breaker.**

Reliability

- It is the ability to not to fail in its function The protective relaying should not fail to operate in the event of faults in the protected zone, Reliability means trustworthiness
- A protective relay must operate reliably when a fault occurs, it can be achieved by redundancy
- Redundancy in protection depends on the criticality of the apparatus
- Reliability can be improved by providing backup protection
- The reliability of a protective relay should be very high, a typical value being 95%.

,

$$\%\,\mathrm{Re}liability = \frac{Number\ of\ correct\ trips}{Number\ of\ desired\ trips + Number\ of\ incorrect\ trips} \times 100$$

Note that number of desired trips can be greater than or equal to number of correct trips. A desired trip may not happen for various reasons like, the fault level being below the relaying sensitivity, stuck circuit breaker, incorrect setting of relays poor maintenance of circuit breaker etc.

Adequateness

There can be many abnormal conditions and providing protection against every abnormal condition is economically impossible. However, the protection provided for any machine, should be adequate.

The adequateness of protection is judged by considering the following aspects :

- Rating of the protected machine.
- Location of the protected machine.
- Probability of abnormal condition due to internal and external causes.
- Cost of the machine, important.
- Continuity of supply as affected by failure of machine

Economy:

As with all good engineering designs, economics plays a major role. It is difficult and uneconomical to achieve all important general requirements together, so compromisation become necessary. Too much protection is as bad as too little and the relay engineer must strike a sensible compromise with due regard to practical situation considered.

CLASSIFICATION OF PROTECTIVE RELAYS

Protective relays can be classified in various ways depending on the technology used for their construction, their speed of operation, their generation of development, function, etc

Classification of Protective Relays Based on Technology

Protective relays can be broadly classified into the following three categories, Depending on the technology they use for their construction and operation.

Generation of Development

- Electromechanical relays – were developed in earlier 1920s- First generation
- Static relays - were developed in earlier 1960s- Second generation
- Numerical relays - were developed in earlier 1980s- Third generation
    - Microprocessor-based relay
    - Microcontroller-based relay

Electromechanical Relays First generation of relays These relays are further classified into two categories

1. Electromagnetic Attracted relays

- These relays work on the principle of electromagnetic attraction
- Electromagnetic attraction relays operate by virtue of an armature being attracted to the poles of an electromagnet or a plunger being drawn into a solenoid. The electromagnetic force exerted on the moving element is proportional to the square of the current flow through the coil
- Moving Plunger, Moving Iron, attracted armature hinged and balanced beam type of relays are various example.
- Such relay are actuated by d.c. or a.c quantities and instantaneous action.

2. Electro magnetic Induction or Simple Induction relays

- These relays work on the principle of electromagnetic induction
- Uses the principle of electromechanical energy conversion.
- Such relay are actuated by a.c quantities only
- Immune to electromagnetic interference and rugged.

3. Thermal relays.

- The thermal relays utilize the electrothermal effect of the actuating current for their operation.
- Actuated by both a.c and d.c quantities only

Some electromechanical relays also use electrothermic principle for their operation and are based upon the forces created by thermal expansion of metals (bimetallic strip) caused by temperature rise due to flow of current.

ELECTROMAGNETIC ATTRACTION TYPE RELAY

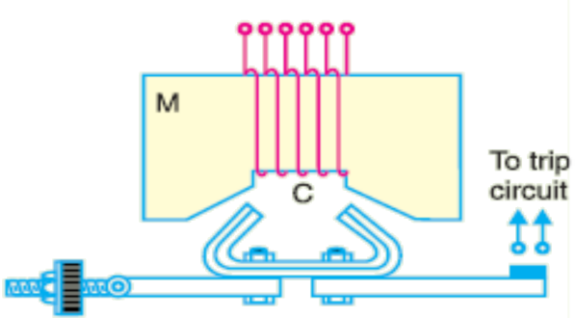

Attracted armature Type Relay

Fig shows Instantaneous relay of the **Attracted armature Type**, when a Fault/short-circuit occurs, the current through the relay winding/coil increases sufficiently, these increases the force of attraction on relay armature and the armature(Light moving parts) is attracted upwards. This completes the trip circuit which results in the opening of the circuit breaker and, therefore, in the disconnection of the faulty circuit, Tapping are provide on relay coil to set Pick up current value, very high operating speed are possible(0.5milli seconds)VA Burden of relay is of 0.2 to 0.6VA and for a current range of 0.1 to 0.4A

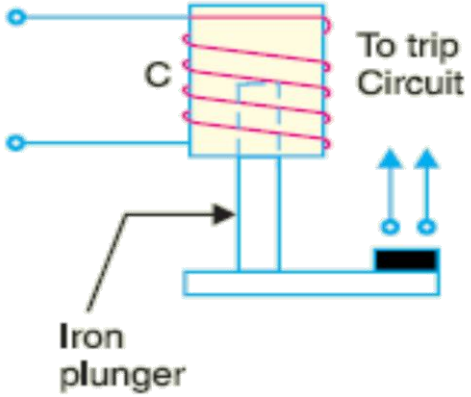

Solenoid-Plunger type relay

The Solenoid-Plunger type relay can be used for instantaneous action, under normal condition the supply through relay coil is insufficient to pull Plunger inside and remain as shown in fig. on the occurrence of a fault, the current through the relay coil becomes more than the pickup value, causing the plunger to be attracted to the solenoid. The upward movement of the plunger closes the trip circuit, thus opening the circuit breaker and disconnecting the faulty circuit .

Electromagnetic Attracted relays can be designed to respond over/under currents, over/under voltage. They are used for both A.C and D.C applications. They are used as measuring relays or auxiliary relays

ELECTRO MAGNETIC INDUCTION RELAYS

Electromagnetic induction relays operate on the principle of induction motor and are widely used for protective relaying purposes involving A.C. quantities.

An induction relay essentially consists of a pivoted aluminium disc (form of the rotor of the non-magnetic moving element) placed in two alternating magnetic fields of the same frequency but displaced in time and space. The torque is is developed by the interaction of electromagnetic fluxes with eddy current, that is induced in the rotor by these fluxes..

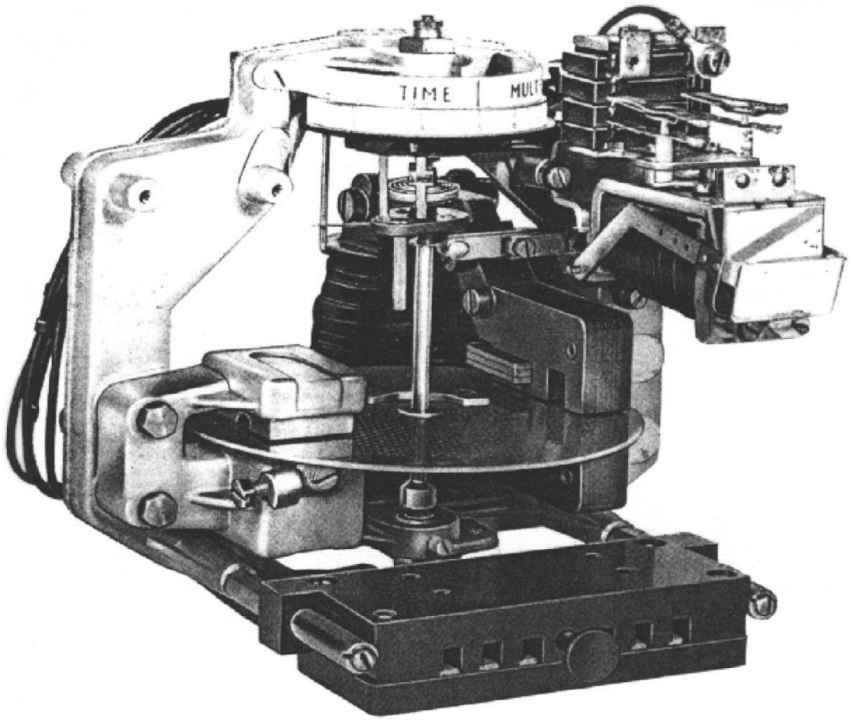

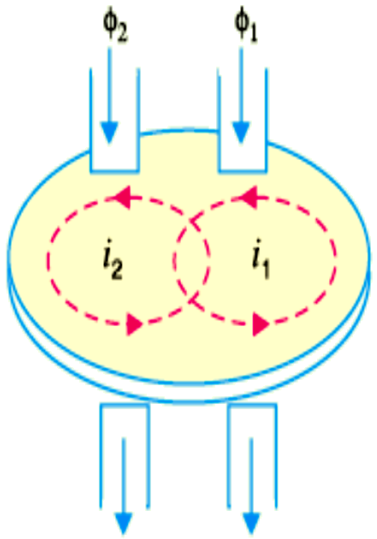

(i)

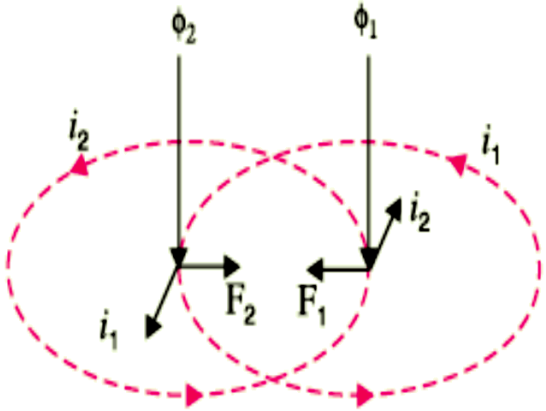

(ii)

$$F \propto \varphi_1 \varphi_2 \sin \alpha$$

Electromagnetic induction relay

The different type of structure has been used for obtaining the phase difference in the fluxes. These structures are

a. Shaded pole structure

b. Watt-hour meter or double winding structure

c. Induction cup structure

a. SHADED-POLE TYPE INDUCTION DISC RELAY.

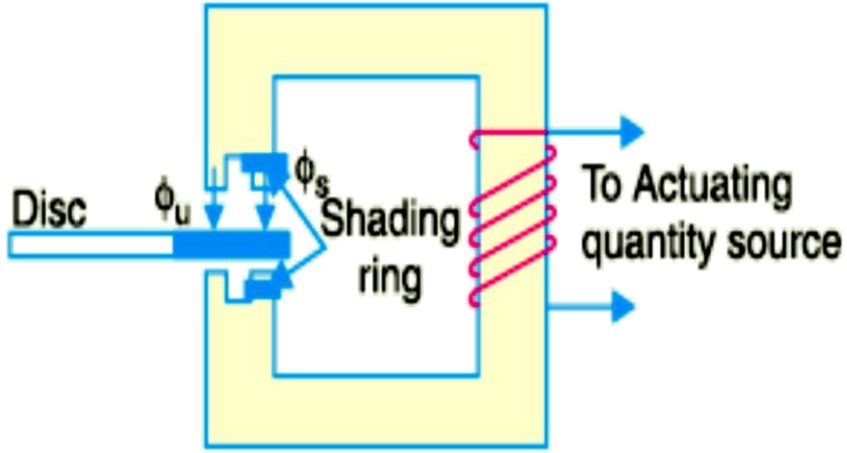

- It consists of a pivoted aluminium disc free to rotate in the air-gap of an electromagnet.
- One half of each pole of the magnet is surrounded by a copper band known as shading ring.
- The alternating flux φs in the shaded portion of the poles will, owing to the reaction of the current induced in the ring, lag behind the flux φu in the unshaded portion by an angle α.
- These two a.c. fluxes differing in phase will produce the necessary torque to rotate the disc. As proved earlier, the driving torque T is $T \propto \varphi_s \varphi_u \sin \alpha$
- Assuming the fluxes φs and φu to be proportional to the current I in the relay coil $T \propto I^2 \sin \alpha$

b. Wattmetric Type Induction disc relay.

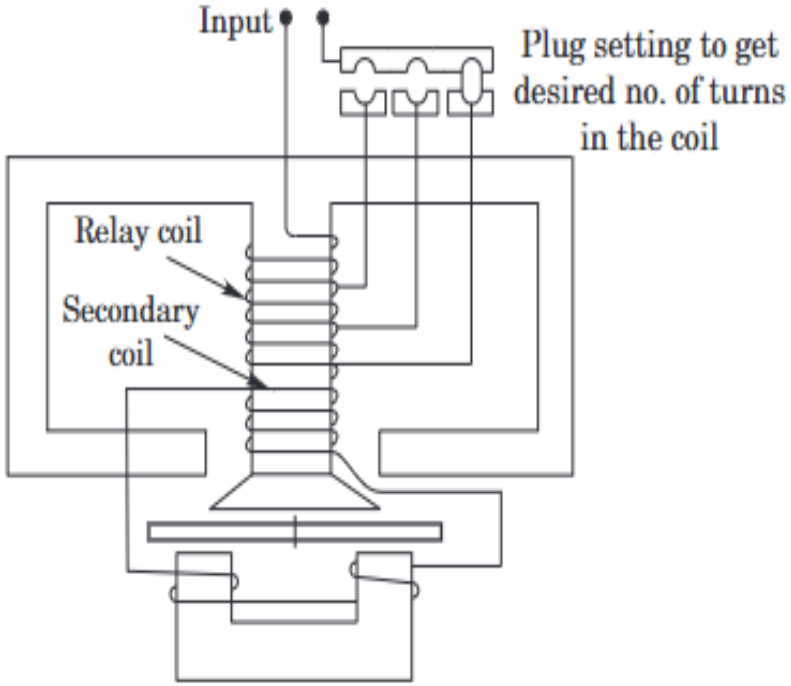

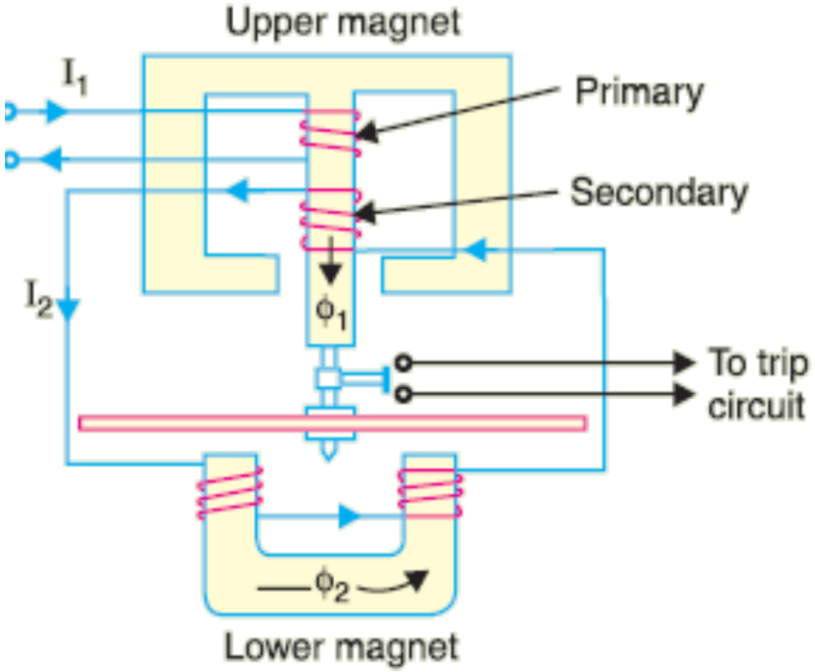

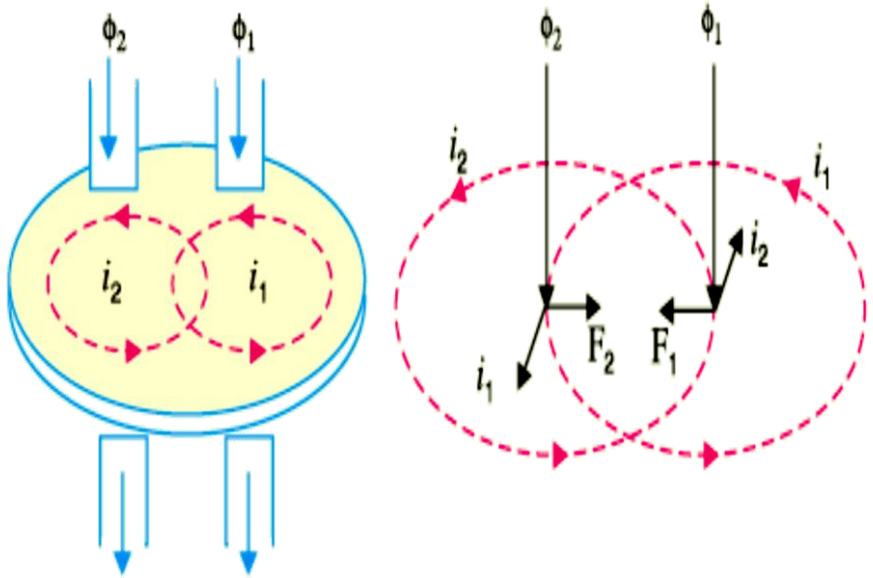

$$F \propto \varphi_1 \varphi_2 \sin \alpha$$

It consists of a pivoted aluminium disc arranged to rotate freely between the poles of two electromagnets.

The primary current induces e.m.f. in the secondary and so circulates a current I2 in it. The flux φ2 induced in the lower magnet by the current in the secondary winding of the upper magnet will lag behind φ1 by an angle α.

The two fluxes φ1and φ2 differing in phase by α will produce a driving torque on the disc proportional to φ1φ2 sin α.

Torque Equation of an Induction Disc Relay

Let and ϕ1 and ϕ2 be the two fluxes at a phase difference of θ and which produce eddy currents iϕ1 and iϕ2 in the disc.

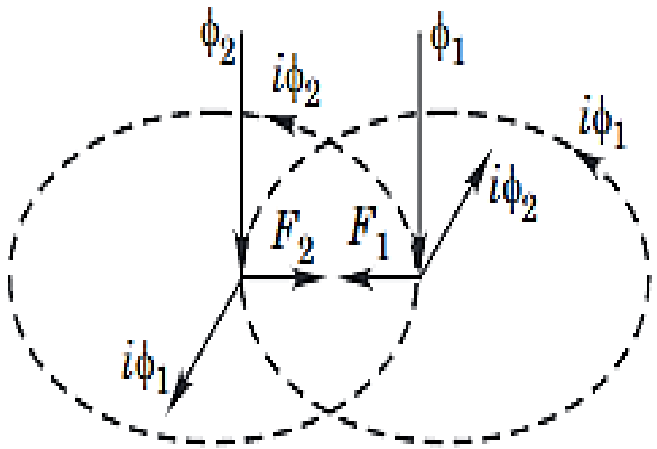

$$\phi_1 = \phi \sin \omega t$$

$$\phi_2 = \phi \sin (\omega t + \theta)$$

$$i\phi_1 = \frac{d\phi_1}{dt} \propto \phi \cos \omega t$$

$$i\phi_2 = \frac{d\phi_2}{dt} \phi \cos (\omega t + \theta)$$

$$F = (F_2 - F_1) \propto \phi_2 \, i\phi_1 - \phi_1 \, i\phi_2$$

where F is net force due to interaction between ϕ2 and ϕ1 . F1 is force due to interaction between ϕ1 and ϕ2 .

$$F \propto \phi_1 \, \phi_2 \, [\sin (\omega t + \theta) \cos \omega t - \sin \omega t \cos (\omega t + \theta)]$$
$$\propto \phi_1 \phi_2 \sin \theta.$$

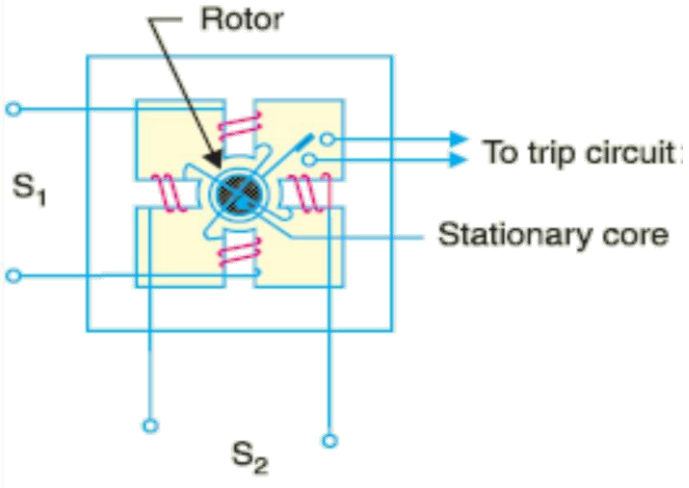

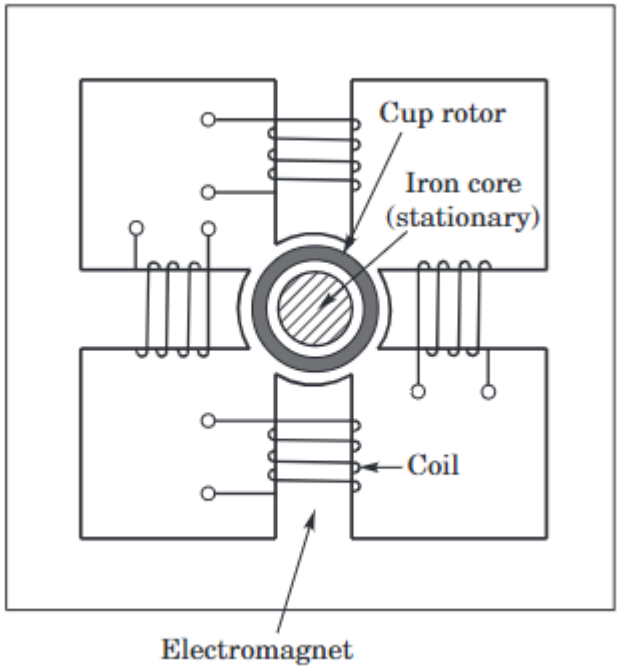

c. Induction cup Relay

It most closely resembles an induction motor, except that the rotor iron is stationary, only the rotor conductor portion being free to rotate. The moving element is a hollow cylindrical rotor which turns on its axis. The rotating field is produced by two pairs of coils wound on four poles as shown.

The rotating field induces currents in the cup to provide the necessary driving torque. If φ1 and φ2 represent the fluxes produced by the respective pairs of poles, then torque produced is proportional to φ1φ2 sin α where α is the phase difference between the two fluxes.

A control spring and the back stop for closing of the contacts carried on an arm are attached to the spindle of the cup to prevent the continuous rotation.

Induction cup structures are more efficient torque producers than either the shaded-pole or the watthour meter structures.

This type of relay has very high speed and may have an operating time less then 0·1 second

Static Relays

With the advent of transistors, operational amplifiers etc, solid state relays were developed

These relays contain electronic circuits which may include transistors, IC, diodes and other electronic components. Their functionality is through various operations like comparators, comparator circuit in the relay which compares two or more currents or voltages and gives an output which is applied to either a slave relay or a thyristor circuit.

The slave relay is electromagnetic relay which finally closes the contact.

Major advantages are

- They provide more flexibility and have less power consumption than their electromechanical counterpart.
- Low burden on CT. and P.T..
- Self checking facility. i.e. the relays can monitor their own health and raise a flag or alarm if its own component fails
- Fast in action and high sensitivity
- Improved dynamic performance characteristics (Wide range of Characteristics are achieved).
- High seismic withstand capacity.(To Vibrations)
- Require Less maintenance, Reduced panel space.

- Relay burden refers to the amount of volt amperes (VA) consumed by the relay. Higher is this value, more is the corresponding loading on the current and voltage sensors i.e. current transformers (CT) and voltage transformers (VT) which energizes these relays. Higher loading of the sensors lead to deterioration in their performance.
- A performance of CT or VT is gauged by the quality of the replication of the corresponding primary waveform signal. Higher burden leads to problem of CT saturation and inaccuracies in measurements. Thus it is desirable to keep CT/VT burdens as low as possible.

The Demerits of static relays are as follows:

- Static relays are temperature sensitive. Their characteristics may vary with the variation of temperature and ageing. Temperature compensation can be made by using thermistors and by using digital techniques for measurements, etc.
- Static relays are sensitive to voltage transients. The semiconductor components may get damaged due to voltage spikes. Filters and shielding can be used for their protection against voltage spikes.
- The reliability is less because it consist of large number of components and relay have low short time over load capacity.
- Static relays need an auxiliary power supply. This can however be easily supplied by a battery or a stabilized power supply.

Static relays have been now superseded by the microprocessor based relays or numerical relays.

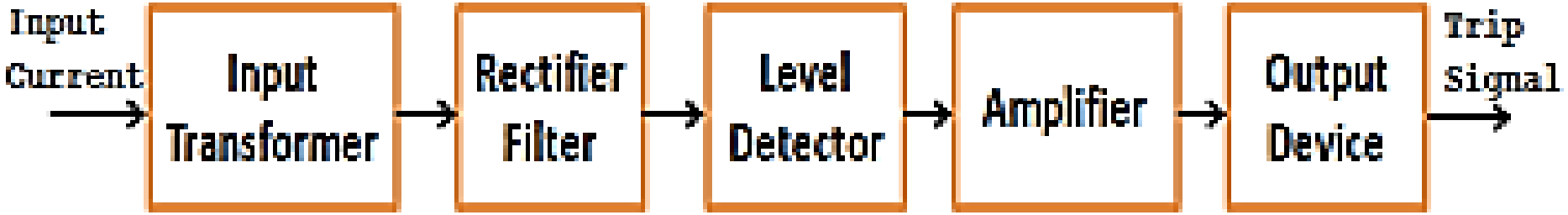

BLOCK DIAGRAM OF AN INSTANTANEOUS OVER CURRENT STATIC RELAY

The transformer is fed from the current transformer (CT). It gives an output voltage proportional to fault current. The Bridge rectifier converts a.c. to d.c. and is smoothened by a partial filter circuit. Filtering providing inherent time delay. The partial filtered voltage is limited by a zener diode (limiter) and is then compared against a preset pick up value (again a zener diode) and if it exceeds it, a signal is given to the output transistor/circuit through an amplifier. The output circuit (transistor) conducts and the circuit-breaker trip coil is energized for opening operation.

Numerical Relays

It involves analog to digital (A/D) conversion of analog voltage and currents obtained from secondary of CTs and VTs. These current and voltage samples are fed to the microprocessor or Digital Signal Processors (DSPs) where the protection algorithms or programs process the signals and decide whether a fault exists in the apparatus under consideration or not. In case, a fault is diagnosed, a trip decision is issued. Numerical relays provide maximum flexibility in defining relaying logic, The block diagram of a numerical relay is shown in fig 1.5

These relays acquire the sequential samples of the ac quantities in numeric (digital) data through data acquisition system and process the data numerically using an algorithm to calculate the fault discriminants and make trip decisions.

These relays are based on numerical devices
e.g. microprocessors, microcontrollers, digital signal processors etc.

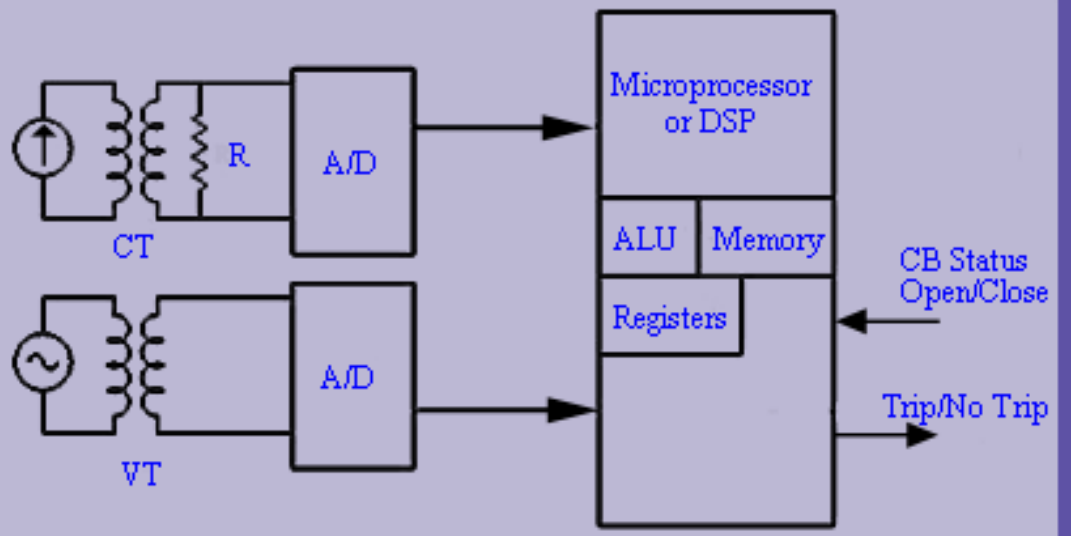

Fig 1.5 Block Diagram of Numerical Relay

The main Advantages/ features of numerical relays are their

- Self checking and communication facility it can be treated as an Intelligent Electronic Device (IED)
- Adaptive i.e. it can adjust to changing apparatus or system conditions
- Multiple functionality, Maximum flexibility, Reliability
- Low burden on instrumentation transformers(CT &VT).
- Economy, compactness

Numerical Relays (contd..)

The Hardware comprising of numerical relay can be made scalable i.e., the maximum number of v and i input signals can be scaled up easily. A generic hardware board can be developed to provide multiple functionality. Changing the relaying functionality is achieved by simply changing the relaying program or software. Also, various relaying functionalities can be multiplexed in a single relay. It has all the advantages of solid state relays like self checking etc. Enabled with communication facility, it can be treated as an Intelligent Electronic Device (IED) which can perform both control and protection functionality. Also, a relay which can communicate can be made adaptive i.e. it can adjust to changing apparatus or system conditions. For example, a differential protection scheme can adapt to transformer tap changes. An overcurrent relay can adapt to different loading conditions. Numerical relays are both "the present and the future"

Numerical Relays (contd..)

- The Levels of voltage and current signals of the power system are reduced by voltage and current transformers (VT and CT). The outputs of the CT and VT (transducers) are applied to the signal conditioner which brings real-World signals into digitizer.

- The signal conditioner electrically isolates the relay from the power system reduces the level of the input voltage, converts current to equivalent voltage and remove high frequency components from the signals using analog filters

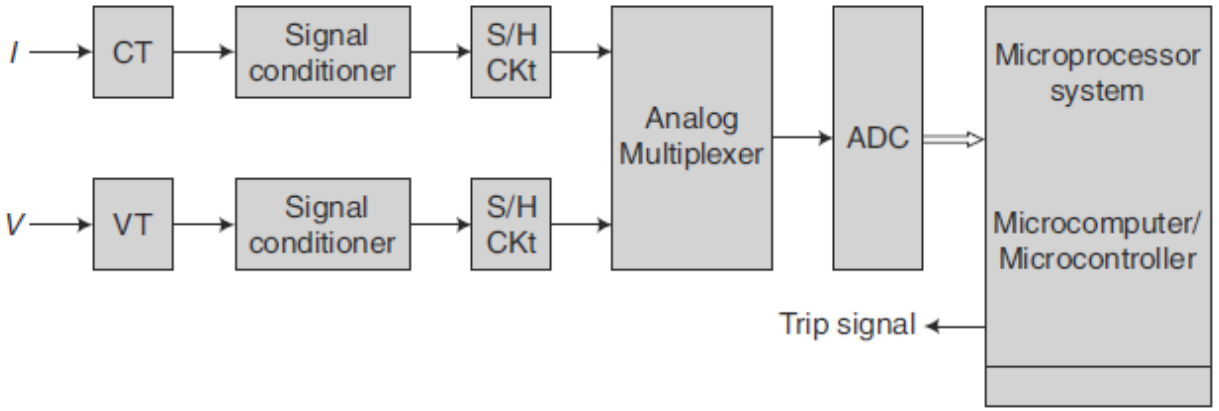

The schematic diagram of a typical numerical relay

- The output of the signal conditioner are applied to the analog interface, which includes sample and hold (S/H) circuits, analog multiplexer and analog-to-digital (A/D) converters
- These components sample the reduced level signals and convert their analog levels to equivalent numbers the are stored in memory for processing.
- The signal conditioner, and the analog interlace (i.e., S/H CKt, analog multiplexer and A/D converter) constitute the data acquisition system (DAS).
- The acquired signals in the form of discrete numbers are processed by a numerical relaying algorithm to calculate the fault discriminants and make trip decisions. if there is a fault within the defined protective zone, a trip signal is issued to the circuit breaker

Sr. No.	Feature	Electromechanical Relay	Numerical Relay
1.	Size	Bigger	Compact
2.	Characteristics	Fixed	Selectable
3.	Flexibility	No flexibility	Flexibility due to programmability.
4.	Communication feature	Not available	Available
5.	Blocking feature	Not available	Available
6.	Self-supervision	Not available	Available
7.	Adaptability	Not adaptable	Adaptable to changing system condition.
8.	Multiple-functions	Not possible	Possible
9.	Accuracy	± 5% or more	± 2%
10.	Speed of operation	Slow	Fast
11.	Burden on Transducers (CTs and VTs)	Very high	Extremely low
12.	Consistancy of calibration	Deteriorate with time	No effect on calibration even after use of 20-25 years
13.	Setting	Through plug setting in fix steps.	Software based settings.
14.	Memory feature	No memory of any type is available.	Several memory features are available.
15.	Maintenance	Cumbersome and frequent maintenance required.	Maintenance free relays
16.	Output relay programming	Not available	Available
17.	Accessibility of relay from remote place	Not possible	Remote accessibility is available
18.	Status of service values	Not available	Available
19.	Safety of personnel	Not adequate due to non-accessibility at remote location.	Adequate safety is provided.
20.	Spares requirement	There is need to stock several items as spare.	Universal designs minimise the spares requirement.
21.	Upward connectivity for a present or future system such as SCADA, EMS etc.	Not possible	Possible

CLASSIFICATION OF PROTECTIVE RELAYS BASED ON TIME OF OPERATION.

Protective relays can be generally classified by their Time of operation as follows:.

- **Instantaneous relays**

  In this relay, the relay operates instantly without any intentional time delay, no intentional time delay is introduced to slow down their response.

- **Definite time lag relay**

  Time of operation is quite independent of the magnitude of current or other quantity causing operation

- **Inverse time-lag relay**

  Time of operation is inversely proportional to the magnitude of current or other quantity causing operation

- **Inverse definite minimum time lag relays(IDMT Relay)**

  The time of operation is approximately inversely proportional to the smaller values of current or other quantities which causes operation (smaller value of P.S.M.) and tend to a definite minimum time as the value increases without limit

- High-speed relays

  These relays operate in less than a specified time. The specified time in present practice is 60 milliseconds (corresponding to 3 cycles on a 50 Hz). speed and accuracy bear an inverse relationship. The high-speed systems tend to be less accurate for the simple reason that a high speed system has lesser amount of information available at it's disposal for making decision.

Classification of Protective Relays Based on their Function

Protective relays can be classified into the following categories, depending on the duty they are required to perform:

- Over current relays : These relays are used to provide protection against over currents
- Under voltage relays : These relays are used to provide protection against under voltage
- Impedance relays : These relays are used for transmission line protection
- Under frequency relays: These relays are used to provide protection against under frequency
- Directional relays: These relays operate only when current flows in a particular direction.

The above relays may be electromechanical, static or numerical

Automatic Reclosing

Faults on overhead lines fall into one of three :

A. transient

B. semi-permanent

C. permanent

- 80-90% of faults on any overhead line network are transient in nature. The remaining 10%-20% of faults are either semi-permanent or permanent
- **Transient faults** are commonly caused by lightning and temporary contact with foreign objects. The immediate tripping of one or more circuit breakers clears the fault. Subsequent re-energization of the line is usually successful.
- A small tree branch falling on the line could cause a **semi-permanent fault**. The cause of the fault would not be removed by the immediate tripping of the circuit, but could be burnt away during a time-delayed trip. HV overhead lines in forest areas are prone to this type of fault.
- **Permanent faults**, such as broken conductors, and faults on underground cable sections, must be located and repaired before the supply can be restored

Automatic Reclosing of circuit breaker is known as Auto-Reclosing

Use of an auto-reclose scheme to re-energize the line after a fault trip permits successful re-energization of the line. Sufficient time must be allowed after tripping for the fault arc to de-energize prior to reclosing otherwise the arc will restrike.

Such schemes have been the cause of a substantial improvement in continuity of supply Particularly to the EHV System in the maintenance of a system stability and Synchronism

The most important parameters of an auto-reclose scheme are:

- Dead time.
- Reclaim time.
- Single Shot or
  - For EHV lines one reclosure is 12 cycles is recommended

- Multi-shot Auto –Reclosing,

  For 33kV Lines or below- More than one automatic reclosure,

  - Usually three reclosure at 15-120 Seconds interval are made to clear the fault
  - 80% of Fault are cleared at 1st Reclosure,
  - 2nd Reclosure Made after delay of 15-45 Seconds, 10% of remaining fault are cleared after 2nd reclosure
  - 3rd Reclosure Made after delay of 60-120s, 10% of remaining fault are cleared after 2nd reclosure, Less than 2% Fault requires 3rd Reclosure

- Single Phase (Single-Pole) Auto Reclosing or Three Phase Auto-reclosing
- Delayed Auto- Reclosing

These parameters are influenced by:

a. Type of protection.
b. Type of switchgear.
c. Possible stability problems.
d. Effects on the various types of consumer loads

Dead Time Several factors affect the selection of system as follows:

a. system stability and synchronism

b. type of load

c. CB characteristics

d. fault path de-ionisation time

e. protection reset time

A typical single-shot auto-reclose scheme is shown in Figures

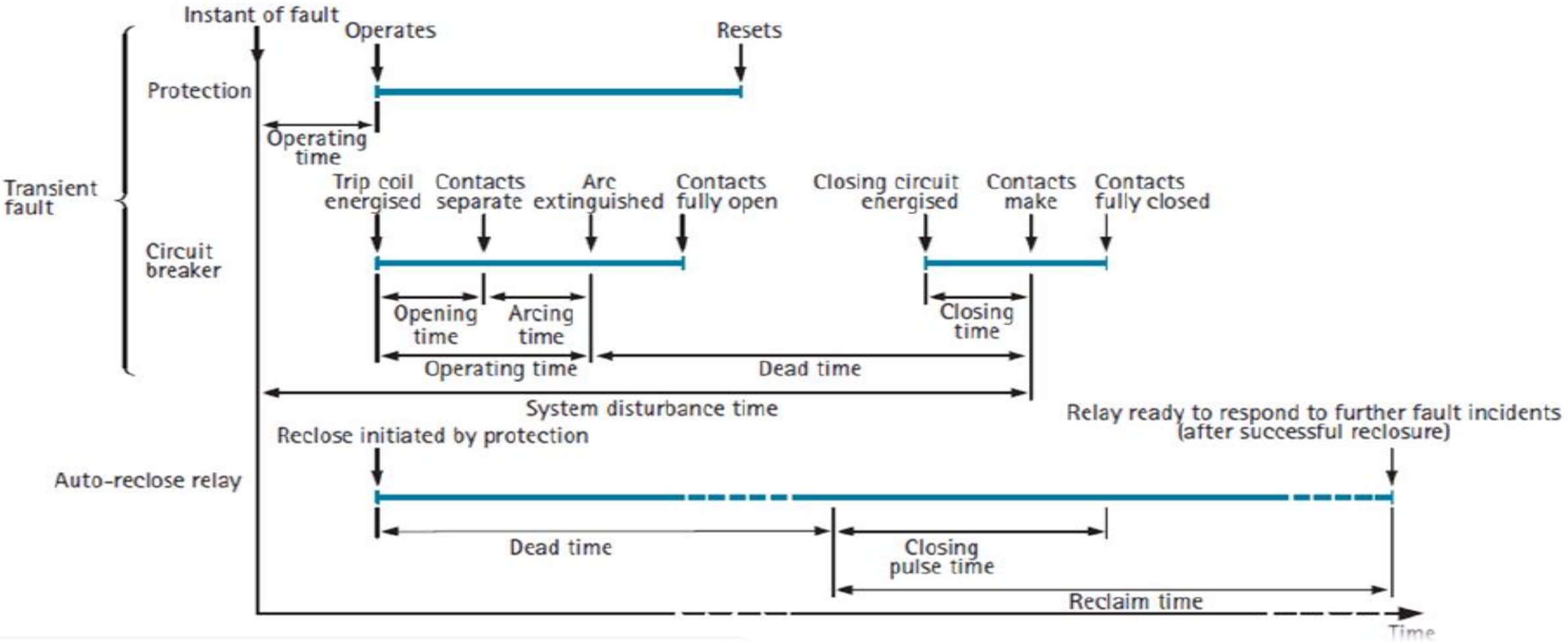

Figure: Single-shot auto-reclose scheme operation for a transient fault, shows a successful reclosure in the event of a transient fault

Auto-Reclosing on HV distribution networks

On HV distribution networks, auto-reclosing is applied mainly to radial feeders where problems of system stability do not arise, and the main advantages to be derived from its use can be summarized as follows:

I. Reduction to a minimum of the interruptions of supply to the consumer.

II. Instantaneous fault clearance can be introduced, with the accompanying benefits of shorter fault duration, less fault damage, and fewer permanent faults As 80% of overhead line faults are transient, elimination of loss of supply from this cause by the introduction of auto-reclosing gives obvious benefits through:

1. Improved supply continuity.
2. Reduction of substation visits

Current and Voltage Transformers

All electrical measurements and relaying decisions are derived from current and voltage signals. CTs and VTs are necessary because

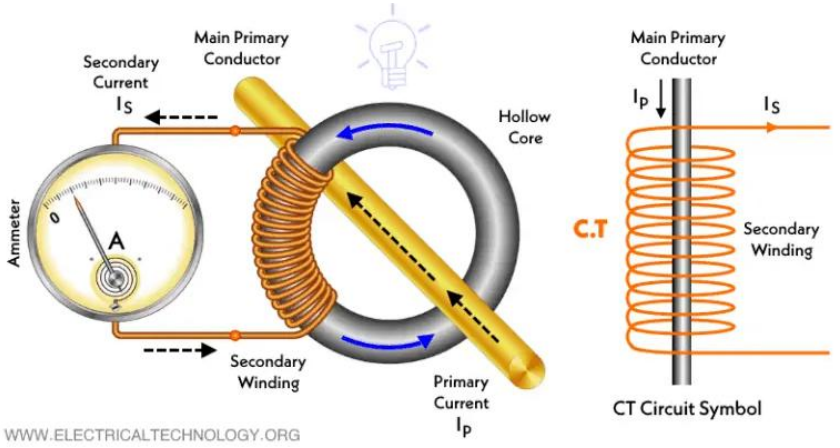

- They scale down line currents and bus voltages to fed into the relays and instruments
- They are sensors for the relay.
- They electrically isolate the relaying system from the actual power apparatus.
- Electrical isolation from the primary voltage provides safety for both human personnel and equipment.
- To provide possibilities of standardizing the relays and instruments, etc. to a few rated currents and voltages, so that degree of interchangeability among different manufactures of relay and meters can be achieved
- Clearly, quality of the relaying decision depends upon ‘faithful' reproduction on the secondary side of the transformer.

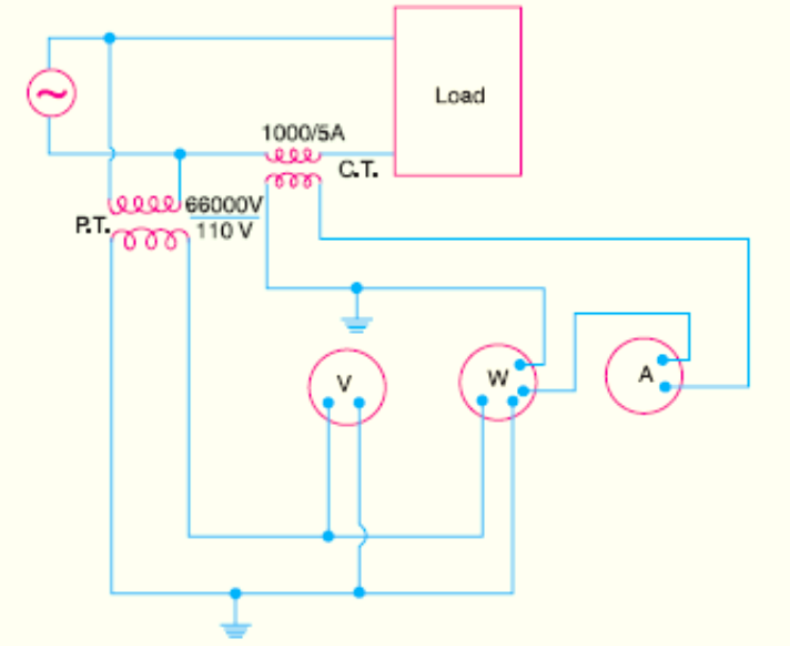

Current and Voltage Transformers

Current Transformer (CT) Fact

- CT is used to measure high current by producing a proportionally smaller current.
- It is connected in series with the load.
- The primary winding carries actual current, while the secondary carries a scaled-down version.
- CTs are used in relays, energy meters, and protective devices. Standard output currents are typically 5A or 1A.
- The secondary should never be left open this can cause dangerously high voltage.
- Accuracy is affected by burden, saturation and magnetizing current.
- Used in fault detection, overcurrent protection, and system monitoring.

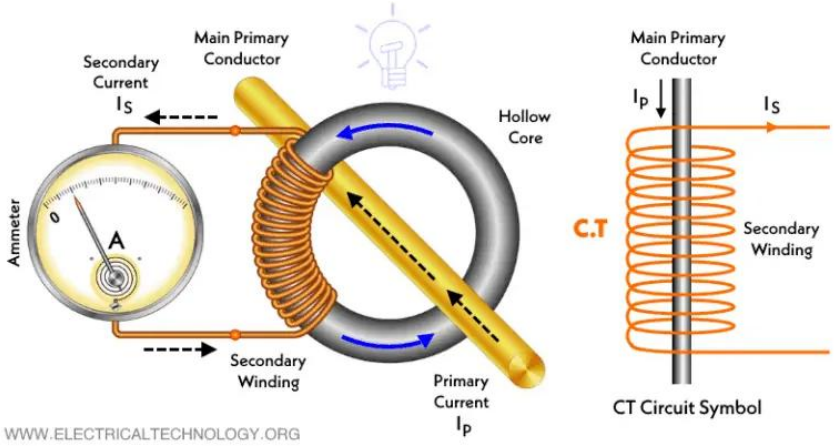

Current and Voltage Transformers

Potential Transformer (PT) Facts

- PT (also called VT – Voltage Transformer) is used to measure high voltage.
- It is connected in parallel to the circuit.
- PT steps down high voltage to a standard value like 110V or 63.5V.
- Provides voltage inputs to meters, relays, and control devices.
- Accuracy class is defined (e.g., 0.1, 0.2, 0.5) for precision measurement.
- Secondary should never be short-circuited.
- Uses high dielectric insulation due to high voltage exposure.
- Core is designed to work under low magnetic flux to avoid saturation.
- Used in voltage protection, synchronizing, and metering applications..

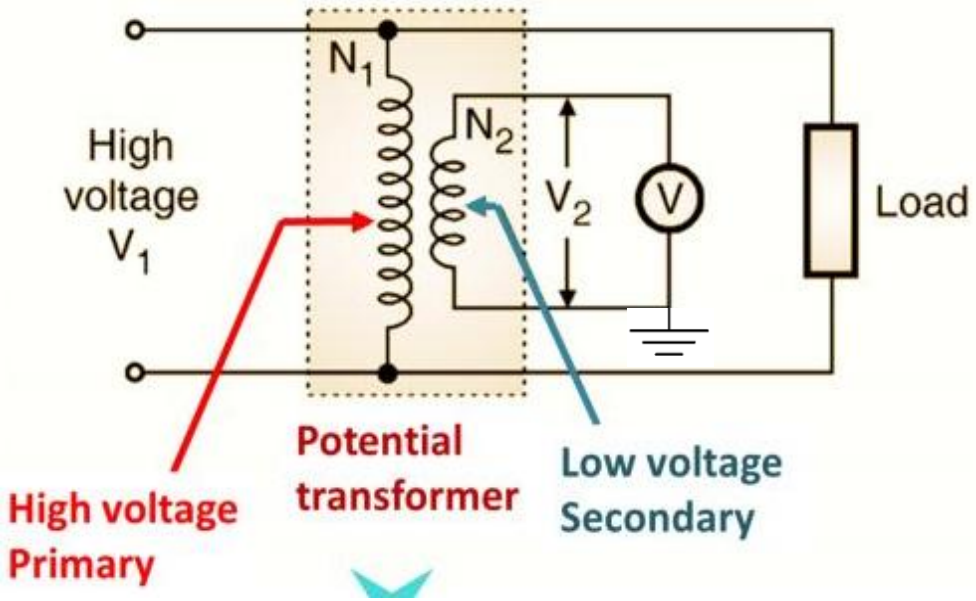

A **voltage transformer** is an open-circuited transformer whose primary winding is connected across the main electrical system voltage being monitored. A convenient proportionate voltage is generated in the secondary for monitoring. The most common voltage produced by voltage transformers is 110 V line to line or 110/√3 (as per local country standards) for primary voltages

However, the **current transformer** is having its primary winding directly connected in series with the main circuit carrying the full operating current of the system. An equivalent current is produced in its secondary, which is made to flow through the relay coil to get the equivalent measure of the main system current. The standard currents are invariably 1 A and 5 A universally.

The VA rating of current transformers is small as compared with that Power transformer.

Though the nominal (Continuous) current ratings of Secondary windings of the CTs are 5A or 1A but they must be designed to tolerate higher values for short time of few seconds under abnormal system conditions, e.g, fault conditions. Since the fault currents may be as high as 50 times full-load current, current transformers are designed to withstand these high currents for a few seconds.

Protective relays require reasonably accurate reproduction of the normal and abnormal conditions in the power system for correct sensing and operation. Hence, the current transformers should be able to provide current signals to the relays and meters which are faithful reproductions of primary currents.

The measure of a current transformer performance is its ability to accurately reproduce the primary current in secondary amperes. Ideally, the current transformer should faithfully transform the current without any error. But, **in practice, there is always some error. The error is both in magnitude and in phase angle, These errors are known as ratio error and phase angle error. The exciting current is the main source of these errors of a CT.**

The primary current contains two components:

- An exciting current, which magnetizes the core and supplies the eddy current and hysteresis losses, etc.
- A remaining primary current component, which is available for transformation to secondary current in the inverse ratio of turns.

The exciting current is not being transformed and is therefore the cause of transformer errors.

The amount of exciting current drawn by a CT depends upon the core material and the amount of flux that must be developed in the core to satisfy the output requirements of the CT. that is, to develop sufficient driving voltage required, pushing the secondary current through its connected load or burden

Transformer ratio: K_n

This is the ratio of secondary to primary winding turns: $K_n = N_s/N_p = I_{pr}/I_{sr}$

The standard symbol used to depict current transformers is shown in Figure

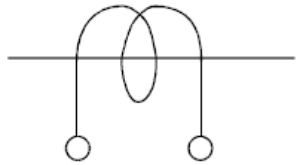

The basis of all transformers is that:

Amp-turns on the Primary = Amp-turns on the secondary

e.g. 100 A × 1 turn = 1 A × 100 turns

Current Ratio Errors – The current transformer is mainly due to the energy component of excitation current and is given as

$$Ratio\ Error = \frac{K_t I_s - I_p}{I_p}$$

Where I_p is the primary current. K_t is the turn ratio and is the secondary current.

Phase Angle Error

But in an actual current transformer, there is a phase difference between the primary and the secondary current because the primary current has also supplied the component of exciting current. Thus, the difference between the two phases is termed as a phase angle error

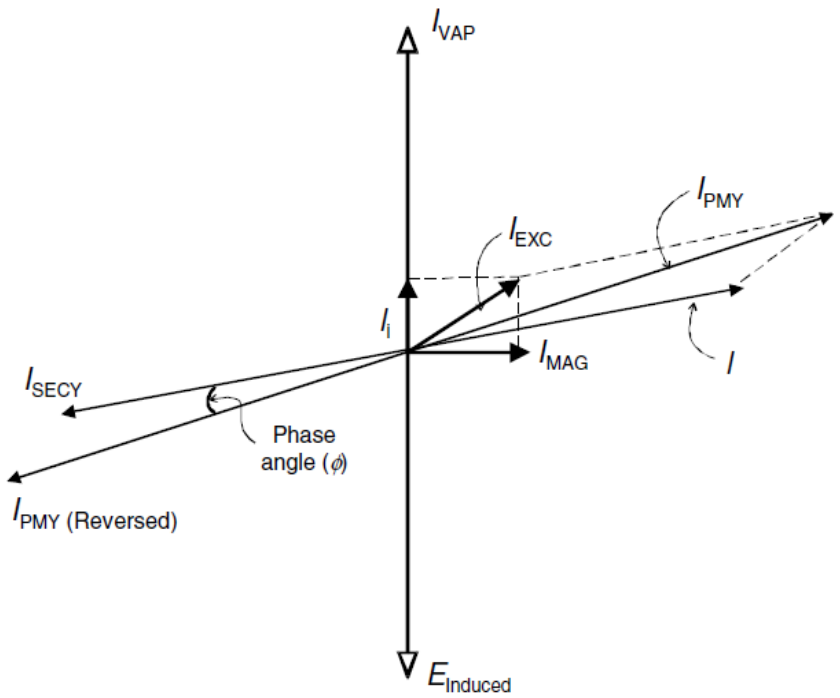

Vector diagram for a current transformer

When the CT is saturated, coupling between primary and secondary is reduced. Hence large ratio errors are expected in saturation. The current in the secondary is also phase shifted. For measurement grade CTs, there are strict performance requirements on phase angle errors also. Error in phase angle measurement affects power factor calculation and ultimately real and reactive power measurements. It is expected that the ratio error for protection grade CTs will be maintained within ±10% .

Classification of CTs

Measuring CTs	Protection CTs
Application Measuring CTs are used to step down high current from power lines to lower value suitable for measuring instruments such as meters.	Application Used in association with protective devices such as relays to monitor fault currents during electrical faults.
Design Metering CTs are designed to have a high measuring accuracy of up to around 125% of the rated current for all loads.	Design Protection type CTs are designed to operate smoothly in high current up to around 10-20 times of the rated current under fault conditions.
Performance The performance of the metering CT is important only during normal conditions. It has significant errors during fault conditions	Performance The performance of a protection type CT is important during fault conditions. It may not deliver accurate performance in power measurement.
Core The core of measuring type CTs is typically made of nickel-iron. Theis core has a low saturation point so that the core can saturate and prevent fault current from reaching the meters.	Core The core of protection type CT is made of cold-rolled silicon steel. This core has a high saturation point so that it keeps working even in a high fault current.

Classification of CTs (contd..)

Measurement or Metering CTs

- They have lower VA capacity than protection grade CTs.
- It has to be accurate over a range of 5% to 125% of Normal current.
- It is not expected to give linear response (secondary current a scaled replica of the primary current) during large fault currents.
- its magnetizing impedance at low current levels. (and hence low flux levels) should be very high. Note that due to non-linear nature of B-H curve, magnetizing impedance is not constant but varies over the CT's operating range

Protection CTs.

- It is expected to give linear response upto 20 times the rated current.
- Its performance has to be accurate in the range of normal currents to fault currents.
- In order to get linear response, CT burden has to be kept low.
- Specifically, for protection grade CT's magnetizing impedance should be maintained to a large value in the range of the currents of the order of fault currents.

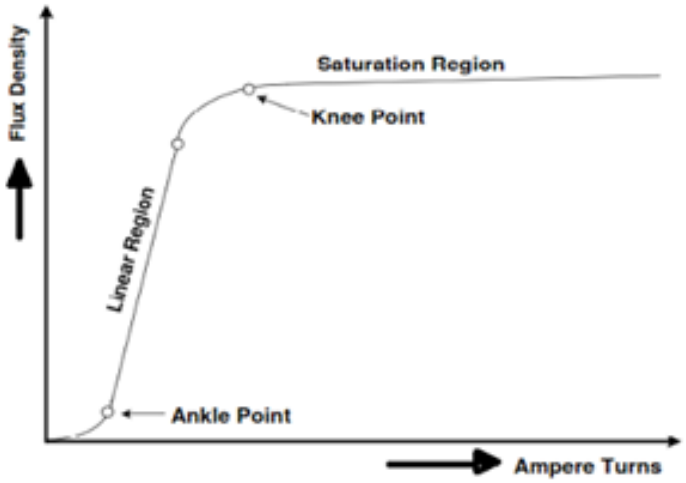

Different Regions of Magnetization Curve

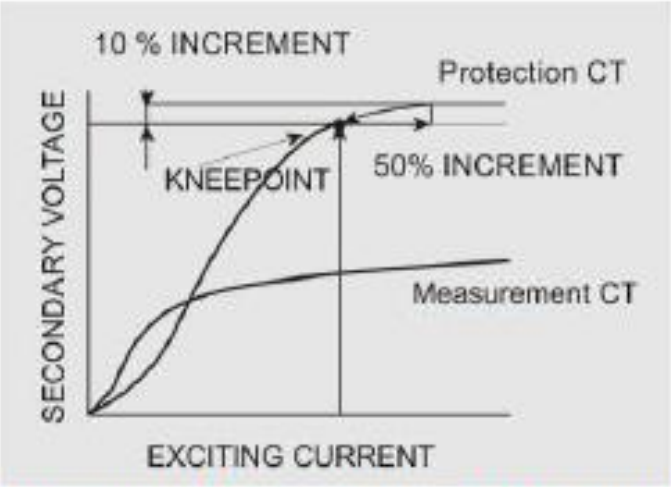

Typical Magnetising Characteristics of CTs indicating the comparison between Measurement & Protection CTs.

Core Material of CTs

Fig. Shows the magnetization Characteristics of

(a) cold-rolled grain-oriented Silicon steel (3%)

(b) hot-rolled silicon steel (4%)

(c) nickel-iron (77% Ni, 14%Fe)

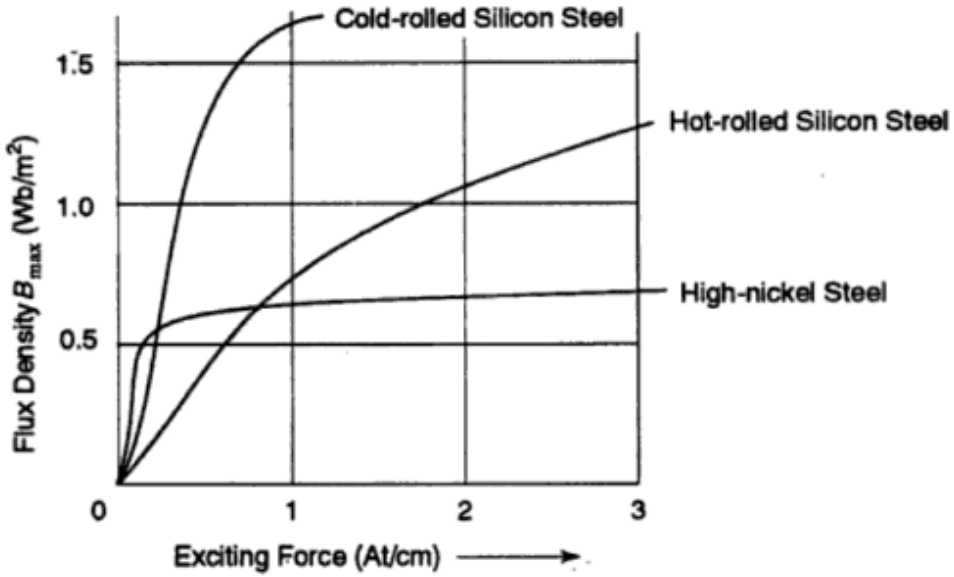

FIGURE Magnetisation characteristics of C.T. cores

- The nickel-iron core has the qualities of highest permeability, low exciting current, low errors and saturation at a relatively low flux density. Measuring CTs are required to give a high accuracy for all load currents up to 125% of the rated Current. Nickel-iron gives a good accuracy up to 5 times the rated current and hence, **nickel-iron core is quite a suitable core material for CTs used for meters and instruments.**

- Cold-rolled grain-oriented silicon steel (3%), which has a high permeability, high saturation level, reasonably small exciting current and low errors and hence **Cold-rolled grain-oriented silicon steel is used for the core of the CTs used for protective relays**. Such core material has reasonably good accuracy up to 10-15 times the rated current, but when we consider currents that are five times under the rated current, the core material made from nickel-iron alloy fares batter.

- **Hot-rolled silicon steel has the lowest permeability. So it is not suitable for CTs.** in order to achieve the desired characteristics. composite cores made of laminations of two or more materials are also used in CTs.

Difference Between Measuring and Protective CTS

Measuring or Metering CTs

CTs which are used to step down the primary currents to low values suitable for the operation of measuring instruments (meters) are called **measuring or metering CTs.**

Secondary of the measuring CTs are connected to the current coils of ammeter, wattmeters, energy meters, etc.

Since the measurements of electrical quantities are performed under normal conditions and not under fault conditions, the performance of measuring CTs is of interest during normal loading conditions.

Measuring CTs are required to give high accuracy for all load currents upto 125% of the rated current. These CTs may have very significant errors during fault conditions, when the currents may be several times their normal value for a short time. This is not significant because metering functions are not required during faults.

The measuring CTs should get saturated at about 1.25 times the full-load current so as not to reproduce the fault current on the secondary side, to avoid damage to the measuring instruments

Metering CT core

- A metering core is designed to work more accurately within the rated current range designated. When current flow exceeds that rating, the metering core will become saturated, thereby limiting the amount of current level within the device. This protects connected metering devices from overloading in the presence of fault level current flows. It buffers the meter from experiencing excessive torques that might be created during those faults.
- High accuracy in a smaller range.
- Less core material is needed
- Leads to Lower Saturation Voltages

Protective CTs

CTs used in association with protective devices i.e. relays, trip coils, pilot wire etc. are called protective CTs.

Protective CTs are designed to have small errors dung fault conditions so that they can correctly reproduce he fault currents for satisfactory operation of the protective relays,

The fault current is abnormal and may be 20 to 50 times the Full-load current. It may have DC offset in addition to AC component. The fault current for a CT secondary of 5A rating could be 100 to 250 A.

Therefore, the CT secondary having continuous current rating of 5A should have short-time current rating of 100 to 250 A. so that the same is not damaged.

Since the ac component in the fault current is of paramount importance for the relays, the protective CT should correctly reproduce it on the secondary side in spite of the DC offset in the primary winding

Hence the DC off set should also be considered while designing the protective CT

The Protective CT should not saturate upto 20 to 50 times full-load current

Protection CT core

- A protection core is designed to transform a distortion-free signal even well into the overcurrent range. This enables the protective relays to measure the fault current value accurately, even in very high current conditions.
- Relays are required to perform in fault current type situations
- Moderate accuracy over a wider range
- More core material is needed

Classification of CTs

ANSI/IEEE standards classify CTs into two types:

- Class T CT
- Class C CT

Class T CT

- is a wound type CT with one or more primary turns wound on a core.
- It is associated with high leakage flux in the core.
- it's performance can be determined only by test.
- CT burden should be kept as low as possible..

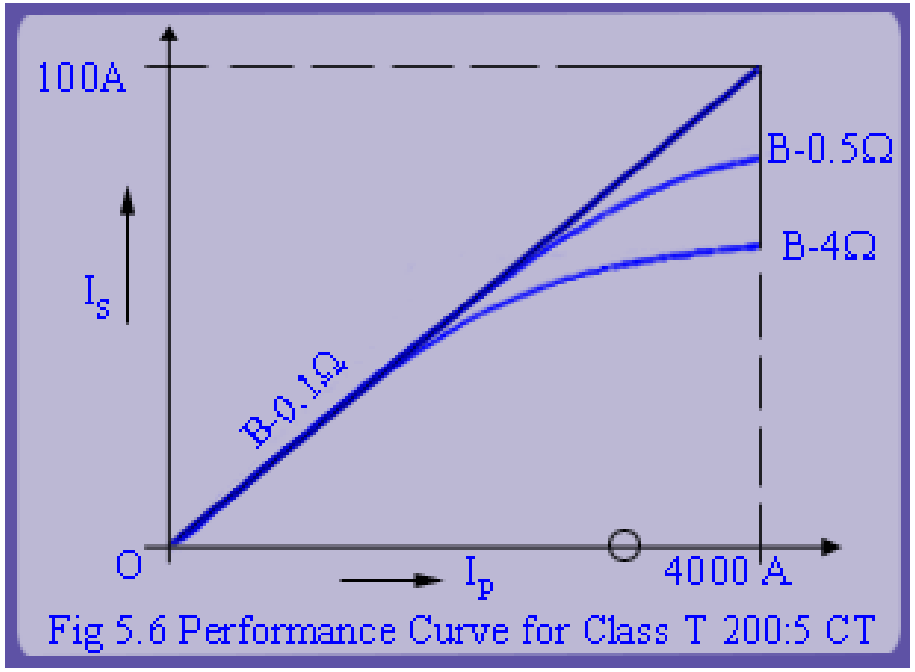

Fig 5.6 Performance Curve for Class T 200:5 CT

Figure 5.6 shows one such experimentally calibrated curve for a CT. The letter 'B' indicates the burden in ohms to which the CT is subjected. It is seen that when burden is less than say 0.1 ohms, CT meets the linear performance criterion. However, as the burden increases to 0.5 ohms, the corresponding linearity criteria is not met till the end. At 4 ohms burden, there is significant deviation from the linear response. **A general rule of thumb is that, one should try to keep the CT burden as low as possible**

Class C CT

- Letter designation 'C' indicates that the leakeage flux is negligible.
- Class C CTs are the more accurate bar type CTs.
- In such CTs, the leakage flux from the core is kept very small.
- For such CTs, the performance can be evaluated from the standard exciting curves.

  Also, the ratio error is maintained within ±10% for standard operating conditions

High Voltage Current Transformer

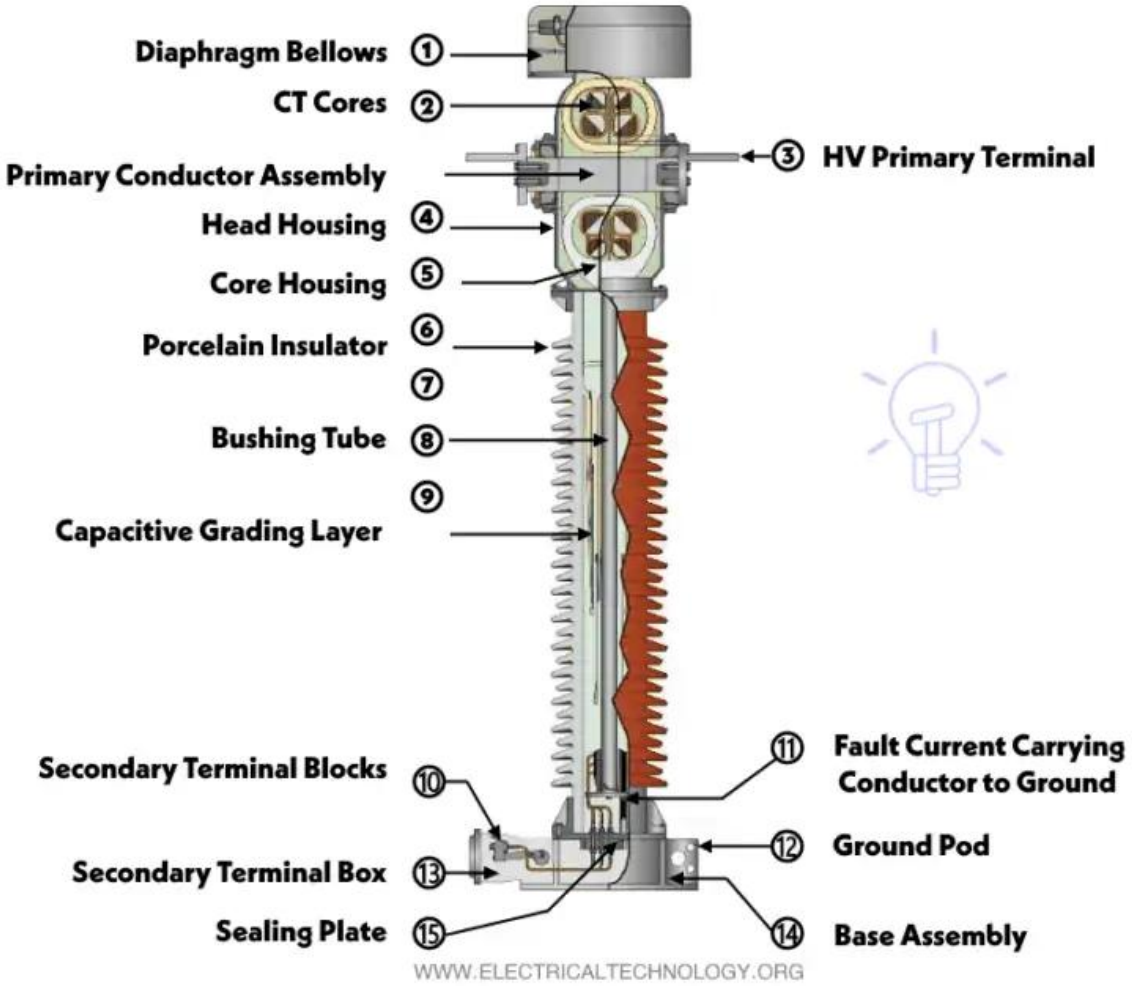

Field installation of a combined optical CT/VT